SMMS SUPER MODULAR MULTI SYSTEM | SMMS SUPER MODULAR MULTI SYSTEM | SHRM SUPER HEAT RECOVERY MULTI

HFC R410A

Leak Detection and Isolation
Installation manual

Model name:

For commercial use

TCB-LD1	Leak Detection and Isolation Module
TCB-LDS1	Leak Detection Sensor (White Facia)
TCB-LDS2	Leak Detection Sensor (Stainless Steel Facia)

ENGLISH

Please read this Installation Manual carefully before installing any of the Leak Detection products.

- This manual describes the installation method of the LD1 isolation control module, including the isolation valves and the LDS1 and LDS2 Leak Detection sensors.
- You must also refer to the Installation and Owner's Manual attached to the Toshiba outdoor unit.
- Toshiba does not take any responsibility on the local design.

ADOPTION OF NEW REFRIGERANT

This Air Conditioner is a new type which adopts a new refrigerant HFC (R410A) instead of the conventional refrigerant R22 in order to prevent destruction of the ozone layer.

This appliance is for commercial use only and should not be accessible to the general public.
This appliance is not intended for use by person (including children) with reduced physical, sensory or mental capabilities, or lack of experience and knowledge, unless they have been given supervision or instruction concerning use of the appliance by a person responsible for their safety. Children should be supervised to ensure that they do not play with the appliance.

Contents

1 PRODUCT OVERVIEW: LEAK DETECTION AND ISOLATION 6

2 PRODUCT SPECIFICATION 8

3 INSTALLATION 10

4 ELECTRICAL WORK 17

5 OPERATION TIMING DIAGRAMS 21

6 DECLARATION OF CONFORMITY. 22

This symbol mark is for EU countries only.
This symbol mark is according to the directive 2002/96/EC Article 10 Information for users and Annex IV.
This product is designed and manufactured with high quality materials and components which can be recycled and reused.
This symbol means that electrical and electronic equipment, at the end-of-life, should be disposed of separately from your household waste.
Please dispose of this equipment at your local community waste collection / recycling centre.
In the European Union there are separate collection systems for used electrical and electronic product.

Thank you for purchasing Toshiba air conditioning products.
Please read carefully through these instructions, as they contain important information and ensure that you fully understand them.
After completing the installation work, hand over this installation manual, as well as the owner's manual attached to the outdoor unit to the user and ask the user to keep them in a safe place for future reference.

Generic Denomination: Refrigerant Leak Detection System

Definition of Qualified Installer or Qualified Service Person
The refrigerant leak detection system must be installed, maintained, repaired and removed by a qualified installer or qualified service person. When any of these jobs is to be done, ask a qualified installer or qualified service person to do them for you.
A qualified installer or qualified service person is an agent who has the qualifications and knowledge described in the table below.

Agent	Qualifications and knowledge which the agent must have
Qualified Installer	• The qualified installer is a person who installs, maintains, relocates and removes the air conditioners made by the OEM manufacture. He or she has been trained to install, maintain, relocate and remove the air conditioners made by the OEM manufacture or, alternatively, he or she has been instructed in such operations by an individual or individuals who have been trained and is thus thoroughly acquainted with the knowledge related to these operations. • The qualified installer who is allowed to do the electrical work involved in installation, relocation and removal has the qualifications pertaining to this electrical work as stipulated by the local laws and regulations, and he or she is a person who has been trained in matters relating to electrical work on the air conditioners made by the OEM manufacture or, alternatively, he or she has been instructed in such matters by an individual or individuals who have been trained and is thus thoroughly acquainted with the knowledge related to this work. • The qualified installer who is allowed to do the refrigerant handling and piping work involved in installation, relocation and removal has the qualifications pertaining to this refrigerant handling and piping work as stipulated by the local laws and regulations, and he or she is a person who has been trained in matters relating to refrigerant handling and piping work on the air conditioners made by the OEM manufacture or, alternatively, he or she has been instructed in such matters by an individual or individuals who have been trained and is thus thoroughly acquainted with the knowledge related to this work. • The qualified installer who is allowed to work at heights has been trained in matters relating to working at heights with the air conditioners made by the OEM manufacture or, alternatively, he or she has been instructed in such matters by an individual or individuals who have been trained and is thus thoroughly acquainted with the knowledge related to this work.

Qualified Service Person	• The qualified service person is a person who installs, repairs, maintains, relocates and removes the air conditioners made by the OEM manufacture. He or she has been trained to install, repair, maintain, relocate and remove the air conditioners made by the OEM manufacture or, alternatively, he or she has been instructed in such operations by an individual or individuals who have been trained and is thus thoroughly acquainted with the knowledge related to these operations. • The qualified service person who is allowed to do the electrical work involved in installation, repair, relocation and removal has the qualifications pertaining to this electrical work as stipulated by the local laws and regulations, and he or she is a person who has been trained in matters relating to electrical work on the air conditioners made by the OEM manufacture or, alternatively, he or she has been instructed in such matters by an individual or individuals who have been trained and is thus thoroughly acquainted with the knowledge related to this work. • The qualified service person who is allowed to do the refrigerant handling and piping work involved in installation, repair, relocation and removal has the qualifications pertaining to this refrigerant handling and piping work as stipulated by the local laws and regulations, and he or she is a person who has been trained in matters relating to refrigerant handling and piping work on the air conditioners made by the OEM manufacture or, alternatively, he or she has been instructed in such matters by an individual or individuals who have been trained and is thus thoroughly acquainted with the knowledge related to this work. • The qualified service person who is allowed to work at heights has been trained in matters relating to working at heights with the air conditioners made by the OEM manufacture or, alternatively, he or she has been instructed in such matters by an individual or individuals who have been trained and is thus thoroughly acquainted with the knowledge related to this work.

Definition of Protective Gear

When the air conditioner is to be transported, installed, maintained, repaired or removed, wear protective gloves and 'safety' work clothing.
In addition to such normal protective gear, wear the protective gear described below when undertaking the special work detailed in the table below.
Failure to wear the proper protective gear is dangerous because you will be more susceptible to injury, burns, electric shocks and other injuries.

Work undertaken	**Protective gear worn**
All types of work	Protective gloves 'Safety' working clothing
Electrical-related work	Gloves to provide protection for electricians and from heat, Insulating shoes and Clothing to provide protection from electric shock
Work done at heights (50 cm or more)	Helmets for use in industry
Transportation of heavy objects	Shoes with additional protective toe cap
Repair of outdoor unit	Gloves to provide protection for electricians and from heat

■ Warning Indications on the Refrigerant Leak Detection System

Warning Indicator	Description
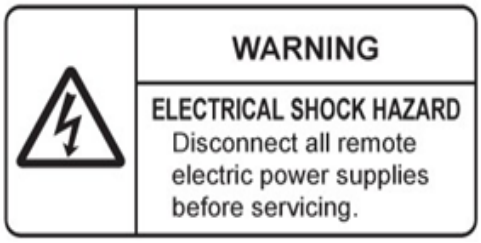	**WARNING** **ELECTRIC SHOCK HAZARD** Disconnect all remote electric power supplies before servicing

PRECAUTIONS FOR SAFETY

- Ensure that all Local, National and International regulations are satisfied.
- The precautions described within this manual include important items regarding safety. Observer them without fail.
- After installation work, perform a trial operation to check for any problem
- Turn off the main power supply switch (or breaker) before unit maintenance.
- Ask the customer to keep this installation and owner's manual safe for future reference.

New refrigerant air conditioner installation

- **The air conditioner in which this leak detection system will be fitted into adopts the new HFC refrigerant (R410A) which does not destroy ozone layer.**
- The characteristics of R410A refrigerant are; easy to absorb water, oxidizing membrane or oil, and its pressure is approx. 1.6 times higher than that of refrigerant R22. Accompanied with the new refrigerant, refrigerating oil has also been changed. Therefore, during installation work, be sure that water, dust, former refrigerant, or refrigerating oil does not enter the refrigerating cycle.
- To prevent charging an incorrect refrigerant and refrigerating oil, the sizes of connecting sections of charging port of the main unit and installation tools are changed from those for the conventional refrigerant.
- Accordingly the exclusive tools are required for the new refrigerant (R410A).
- For connecting pipes, use new and clean piping designed for R410A, and please ensure that water or dust does not enter.

Disconnection of the appliance from mains power supply

Caution: Maximum Operating System Pressure

- The maximum operating pressure of the system should not be exceeded before, during or after the operation of this product. Please refer to the installation manual for the outdoor unit for further information.

---

1 PRODUCT OVERVIEW: LEAK DETECTION AND ISOLATION

1-1. PRODUCT CONCEPT: To detect a refrigerant leak, inside a space (hotel room, office etc), that could cause harm to the occupier. To then isolate the affected area, so that refrigerant can no longer be released into the atmosphere and to allow the safe repair and re-commissioning of the troubled unit.

1-2. SYSTEM COMBINATION:

		Leak Detection System		
		TCB-LD1-PE	TCB-LDS1-PE	TCB-LDS2-PE
Outdoor Unit	Mini VRF (4-6Hp)	-	-	-
	Side-Blow VRF (4-6Hp)	-	-	-
	SMMSi (8-48Hp)	●	●	●
	SHRMi (8-42Hp)	●	●	●
	SMMSe (8-60Hp)	●	●	●

1-3. PRODUCT DEFINITIONS:

Product Name	TCB-LDS1-PE
Product Purpose	Detection of Refrigerant gas, based on the definitions given within BS EN 378-1:2008+A2:2012. ***Note Requires part TCB-LDSBB1 or TCBLDSBB2 to fit.***
Product Appearance	White Plastic Facia, with both Audible and Visual Indicators

Product Name	TCB-LDS2-PE
Product Purpose	Detection of Refrigerant gas, based on the definitions given within BS EN 378-1:2008+A2:2012. ***Note Requires part TCB-LDSBB1 or TCBLDSBB2 to fit.***
Product Appearance	Stainless Steel Facia, with both Audible and Visual Indicators

Product Name	TCB-LD1-PE
Product Purpose	Indoor unit isolation based on external input from LDS1 or LDS2 modules. The system will continue to operate and only the effected unit's down-stream of the LD1 will stop. Location of isolation valves can be varied therefore the LD1 can be used to isolate a single unit or a groups of units via the isolation of a branch.
Product Appearance	Rectangular black plastic box, with visual indicator that is activated upon refrigerant being detected by either the LDS1 or LDS2 modules.

Product Name	Refrigerant Isolation Valves (Part No's vary depending on valve body size)
Product Purpose	Isolates the refrigerant line between the outdoor unit and the Indoor pipework
Product Appearance	Valve assembly consists of two separate components. The 1st is the valve body (shown in the right-hand picture). The valve body comes in a number of sizes ranging from 12.7mm (1/2") to 41.3mm (1" 5/8). The 2nd is the valve actuator, which comes in a number of sizes, depending on the valve body size. The actuator can be rotated to open or shut manually in the event of electrical failure.

1-4. APPLICATION EXAMPLES:

Example One: Refrigerant Leak Detection Only

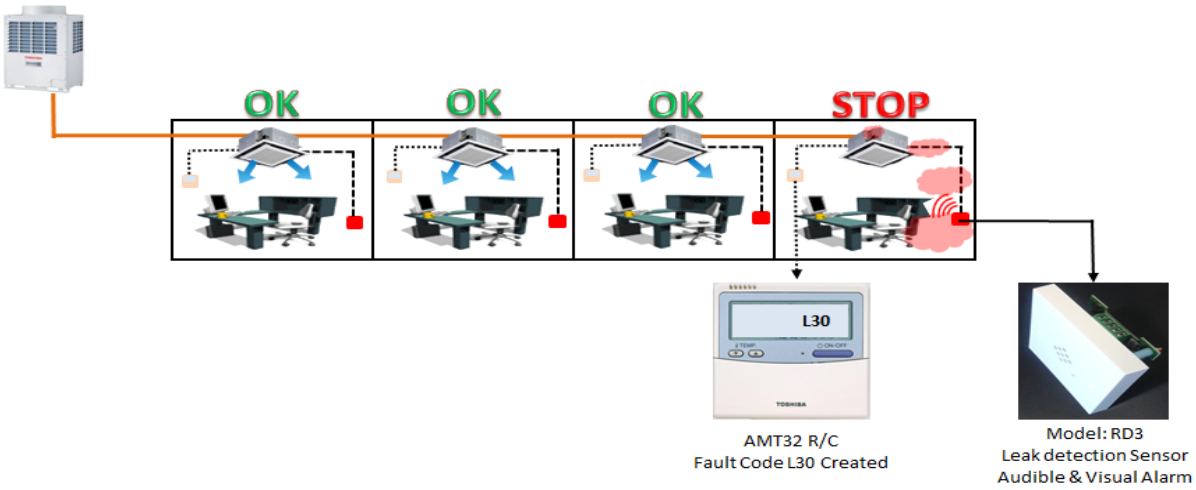

Each room is installed with a leak detection sensor (LDS1 or LDS2). The sensor incorporates a two stage activation process, based upon the refrigerant concentration level and the length of time exposed.

When the refrigerant concentration level exceeds 1000ppm for 30 minutes the LED light will flash and a audible alarm will sound. The effected indoor unit will stop and display a L30 fault code.

When the concentration level exceeds 4000ppm (0.44kg/cm^3) for 30 seconds the sensor is activated and an audible and visual alarm is raised. This conforms to the current EN378 standard. The effected indoor unit will stop and display a L30 fault code.

Example Two: Refrigerant Leak Detection and Indoor Unit Isolation

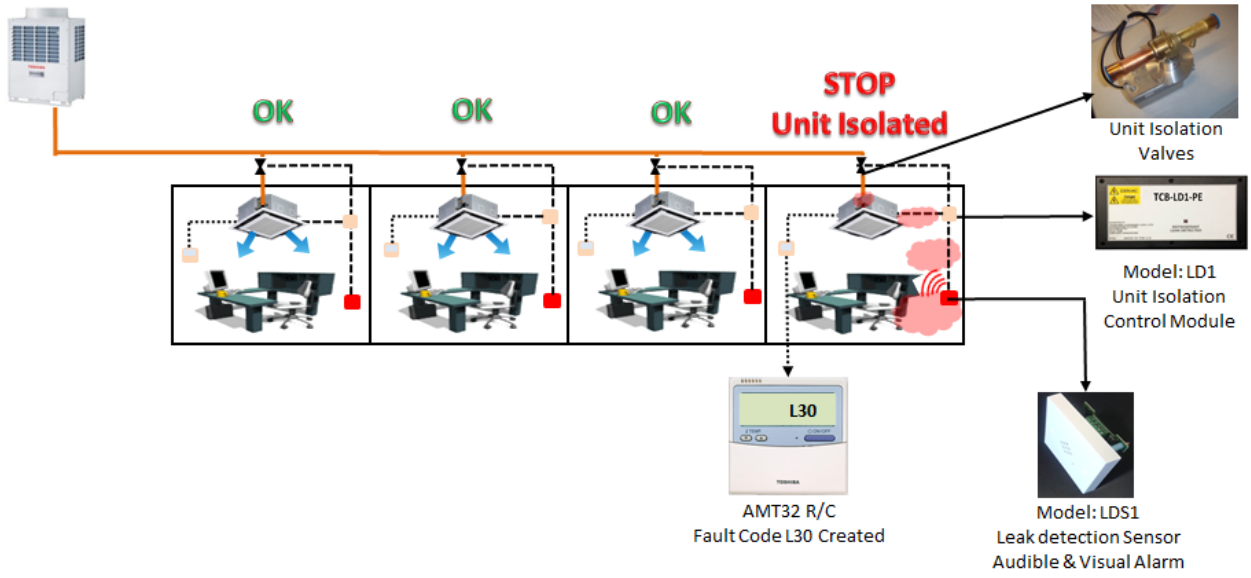

Each room is installed with the LDS1 or LDS2 leak detection sensor, a LD1 Control module and a set of isolation valves, which should be located **OUTSIDE** of the room.
If the refrigerant levels exceed 1000ppm for 30 minutes or 4000ppm for more than 30 seconds the LD1 will activate and the detection sensor will operate as describe in example 1. The isolation valves located on the liquid and gas lines will close, isolating the indoor unit from the rest of the system. The troubled unit can then be safely repaired by qualified service personnel. The effected indoor will also stop and display a L30 fault code, which will be displayed on the local remote and any other connected network devices.

2 PRODUCT SPECIFICATIONS

The Leak Detection System is designed to operate within Toshiba VRF systems (excluding the Mini VRF) and is generic across all types (SMMSi, SHRMi and SMMSe).

2-1. LEAK DETECTION SENSOR SPECIFICATIONS

Model Name		TCB-LDS1	TCB-LDS2
Model Group		VRF (SMMSi / SHRMi / SMMSe /Side-Blow)	VRF (SMMSi / SHRMi / SMMSe / Side-Blow)
Function		Refrigerant Leak Detector	Refrigerant Leak Detector
Height	mm	85	85
Width	mm	85	85
Depth	mm	32	32
Mounting Screw Pitch	mm	60	60
Weight	kg	0.085	0.085
Facia Plate Material		Plastic	Stainless Steel
Colour		White	Stainless Steel
Installation Type		Recessed	Recessed
Audible Alarm		Yes	Yes
Audible Alarm Sound Level	dB	85 (2300Hz ±300)	85 (2300Hz ±300)
Alarm Mute		Powered Off	Powered Off
Visual Indicator (Neon)		3 x Coloured LED	3 x Coloured LED
Fault Code generated to Local Remote Controller		Yes (L30)	Yes (L30)
Interconnecting Cable Max Length (Sensor to FCU)	m	10	10
Interconnecting Cable Type (Sensor to FCU)	mm^2	0.75mm^2 Multi Core	0.75mm^2 Multi Core
Interconnecting Cable Max Length (Sensor to LD1)	m	50	50
Interconnecting Cable Type (Sensor to LD1)	mm^2	0.75mm^2 Multi Core	0.75mm^2 Multi Core
Power Supply		12-24V AC/DC	12-24V AC/DC
Suggested Fuse Size	Amps	N/A	N/A
Circuit Protection Fuse supplied With Cable	mA	125 (Fuse supplied as part of Loom)	125 (Fuse supplied as part of Loom)
Cable Link For Remote On / OFF (Ving Card)		Yes	Yes
Fail Safe Relay Operation		Yes	Yes
Recommended Mounting Height Above floor Level	mm	150	150

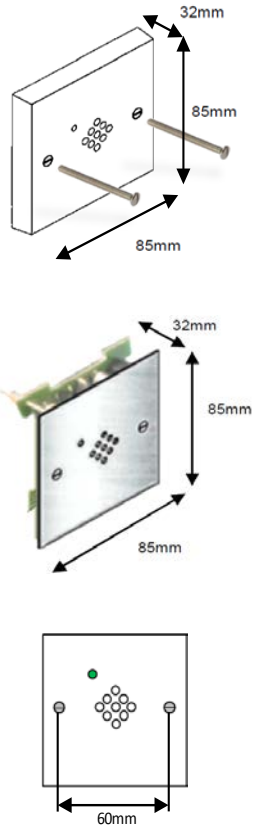

2-2. LEAK DETECTION SENSOR HOUSING

Leak Detection Sensor Back Plate (Required Accessory for LDS1 or LDS2)		
EMEA Part No.	TCB-LDSBB1	TCB-LDSBB2
Manufacturer Part No.	DB2542	SB618
Mounting Method	Flush - Dry Lining (Plaster board 4-20mm deep)	Flush - Wall (concrete)
Mounting Depth	46mm	47mm
Height	86mm	68.3mm
Width	86mm	68.3mm
Material	Plastic	Metal
Photo		

2-3. LEAK DETECTION CONTROL MODULE SPECIFICATION

Model Name		TCB-LD1-PE
Model Group		VRF (SMMSi / SHRMi / SMMSe /Side-Blow)
Function		Leak Detection Control Module
Height	mm	114
Width	mm	194
Depth	mm	62
Weight	kg	0.7
Enclosure Material		FRABS (UL 94-V0 Plastic)
Colour		Black
Standard Rating	IP	50
Audible Alarm		N/A
Audible Alarm Sound Level	dB	N/A
Alarm Mute		N/A
Visual Indicator (Neon)		Yes (Leak Detection)
Fault Code generated to Local Remote Controller		Yes (L30)
Isolation Valve Cable Max Length	m	24
Interconnecting Cable Type	mm^2	1
Power Supply		1 Phase 230V 50Hz
Suggested Fuse Size	Amps	1
In Room Detector (Required Accessory) *Max 1 per circuit		*TCB-LDS1 or TCB-LDS2

2-4. REFRIGERANT ISOLATION VALVE SPECIFICATIONS

Model Name		AW17861	AW17862
Model Group		Cyclemaster Actuated Ball Valves	Cyclemaster Actuated Ball Valves
Function		Isolation of Refrigerant Pipework (Gas & Liquid)	Isolation of Refrigerant Pipework (Gas & Liquid)
Refrigerant Pipe Connection	mm	12.7	15.9
A	mm	102.87	102.87
B	mm	94.23	94.23
C	mm	N/A	N/A
D	mm	68.32	68.32
Weight	Kg	1.07	1.12
Motor Series		1	1
Torque	N-m	4.97	4.97
Running Time (Open - Close)	Sec	90	90
Ambient Operation Limitations	°C	-32 to 55	-32 to 55
Ambient Humidity Limitations	rh %	95	95
Power Consumption	W	2.3	2.3
Operating Voltage	VAC	24	24
Operating Frequency	Hz	50/60	50/60
IP Rating	IP	54	54
		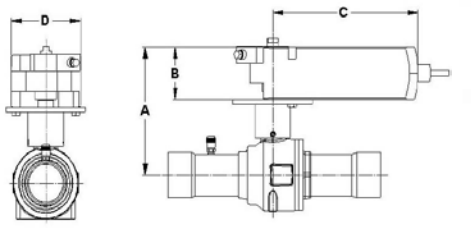	

During the purchasing of this product, it may also be necessary to purchase locally, refrigerant pipe work reducers, as the smallest valve diameter is ½" or 12.7mm. Please refer to the Indoor Installation instruction to confirm pipe work size.

3 INSTALLATION

CAUTION

New Refrigerant Air Conditioner Installation

- **THIS AIR CONDITIONER ADOPTS THE NEW HFC REFRIGERANT (R410A) WHICH DOES NOT DESTROY OZONE LAYER.**

The characteristics of R410A refrigerant are; easy to absorb water, oxidizing membrane or oil, and its pressure is approx. 1.6 times higher than that of refrigerant R22. Accompanied with the new refrigerant, refrigerating oil has also been changed. Therefore, during installation work, be sure that water, dust, former refrigerant, or refrigerating oil does not enter the refrigerating cycle.
To prevent charging an incorrect refrigerant and refrigerating oil, the sizes of connecting sections of charging port of the main unit and installation tools are changed from those of conventional refrigerant.
Accordingly the exclusive tools are required for the new refrigerant (R410A).
For connecting pipes, use new and clean piping designed for R410A, and please care so that water or dust does not enter. Moreover, do not use the existing piping because there are problems with the pressure-resistance force and impurity in it.

CAUTION

To Disconnect the Appliance from Main Power Supply

This appliance must be connected to the main power supply by means of a switch with a constant separation of at least 3mm.

3-1. LDS1, LDS2 and LD1 Package Contents

Product Function	Leak Detection Sensor		Leak Detion Control Module	Isolation Valves
Product Name	LDS1	LDS2	LD1	AW17861 - AW17864
Box Contents	Front Facia - Qty 1 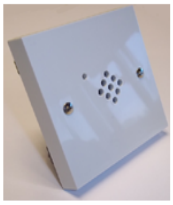 Sensor PCB- Qty 1 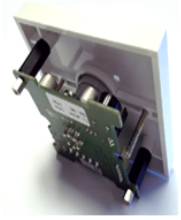 Wiring Harness - Qty 1	Front Facia - Qty 1 Sensor PCB- Qty 1 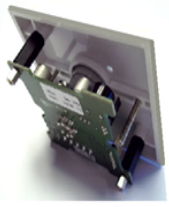 Wiring Harness - Qty 1	Control Module - Qty 1 * CN80 connector pre-installed in control module (not shown in the aove picture)	1 x Pre-assembled vlave body and actuator 1 x Schrader Valve 1 x Hexagon Key 2 x Screws (Not required) 1 x Valve details 1 x Actuator Installation Instructions 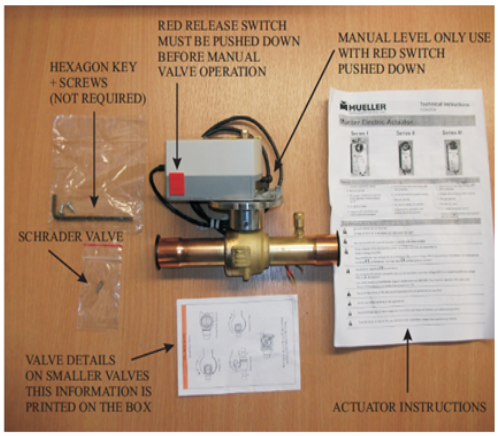

3-2. REQUIRED TOOLS

It is necessary to prepare the tools and parts for the installation as described below. The tools and parts that are exclusive to a refrigerant type should be restricted to exclusive use.

Explanation of symbols

△ : Newly prepared (Exclusive to R410A, not to be used for R22 or R407C.)
◎ : Former tool is available (Generic between R410A, R407C & R22)

Used Tools	Usage	Proper Use of Tools / Parts
Gauge manifold	Vacuuming, charging refrigerant and operation check	△ Exclusive to R410A
Charging hose		△ Exclusive to R410A
Charging cylinder	Charging refrigerant	Unusable (Use the Refrigerant charging balance.)
Gas leak detector	Checking gas leak	△ Exclusive to R410A
Vacuum pump	Vacuum drying	Usable if a counter-flow preventive adapter is attached
Vacuum pump with counter flow	Vacuum drying	◎ R22 (Existing article)
Flare tool	Flare processing of pipes	◎ Usable by adjusting size
Bender	Bending processing of pipes	◎ R22 (Existing article)
Refrigerant recovery device	Recovering refrigerant	△ Exclusive to R410A
Torque wrench	Tightening flare nut	△ Exclusive to Ø12.7 mm and Ø15.9 mm
Pipe cutter	Cutting pipes	◎ R22 (Existing article)
Refrigerant canister	Charging refrigerant	△ Exclusive to R410A Enter the refrigerate name for identification
Welding machine / Nitrogen gas cylinder	Welding of pipes	◎ R22 (Existing article)
Refrigerant charging balance	Charging refrigerant	◎ R22 (Existing article)

3-3. SELECTION OF INSTALLTION PLACE

Upon customer's approval, install the Refrigerant Leak Detection system in a place which satisfies the following conditions:

- A place where it can be installed horizontally.
- A place which can reserve a sufficient service space for safe maintenance or checks.
- A place that is not noise sensitive.

Avoid the following general places:

- Areas that are exposed to extreme temperatures and humidity. Please refer to product specification sheet for limitations (supplied within the valve isolation box)..
- Places where oil (including machine oil), steam, oil smoke or corrosive gas is generated.
- Places where iron or other metal dust is present. If iron or other metal dust adheres to or collects on the interior of the sensor, it may spontaneously combust and start a fire.
- Places where an organic solvent is used.
- Chemical plants with a cooling system using liquid carbon dioxide.
- Places where a device generating high frequency (inverter, non-utility generator, medical apparatus, or communication equipment) is set. (Malfunction or abnormal control of the air conditioner, or interference to devices listed above may occur.)
- Places unable to bear the weight of the apparatus.
- Places with poor ventilation.
- Please refer to specific requirements shown for each product.

3-4. LDS1 AND LDS2 LEAK DETECTION SENSOR INSTALLATION

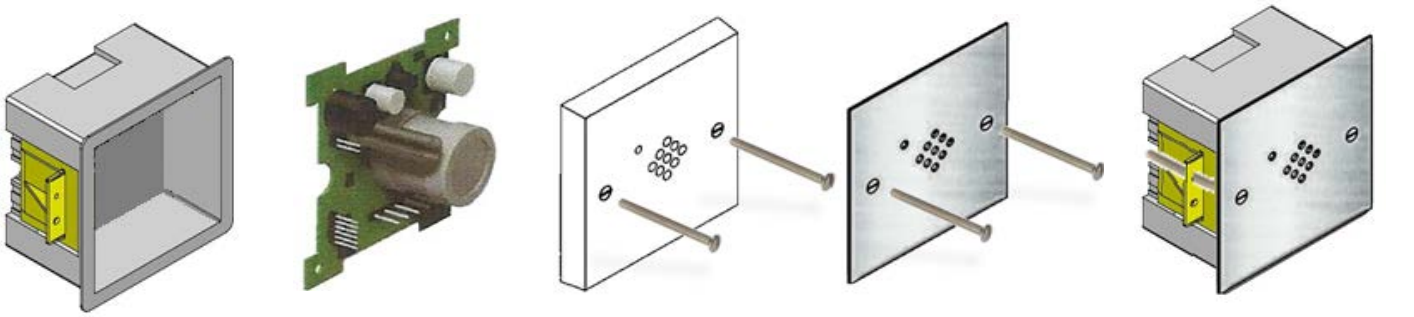

TCB-LDSBB1/2 Sensor Housing | **TCB-LDS1/2 Main PCB** | **TCB-LDS1 (White facia)** | **TCB-LDS2 (Stainless Steel Facia)** | **Fully Installed LDS2 (Stainless Steel Facia)**

The leak detector can be installed in two ways.

Installation Method One: The LDS1 or LDS2 are connected directly to the indoor air conditioning unit. In the event of the refrigerant levels within the detection area exceeding the predefined limits, a stop signal is sent to the indoor air conditioning unit to stop operation. A L30 fault code is then generated on the local wired remote controller and any of the network based controls connected.

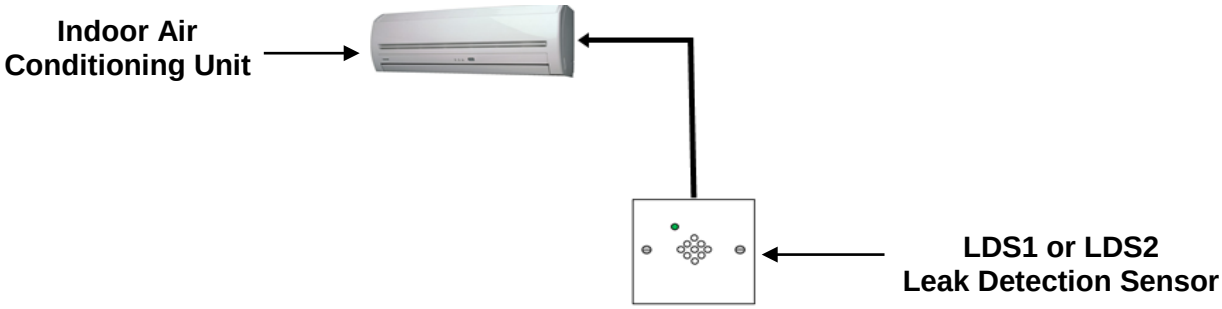

Installation Method Two: The LDS1 or LDS2 are installed in combination with the LD1 control module. The LD1 will use the signal from the sensor to initiate the closure of the isolation valves that supply refrigerant to the indoor unit(s). A stop signal is also sent to the indoor air conditioning unit to stop operation and a L30 fault code is generated on the local wired remote controller and any network based controls connected.

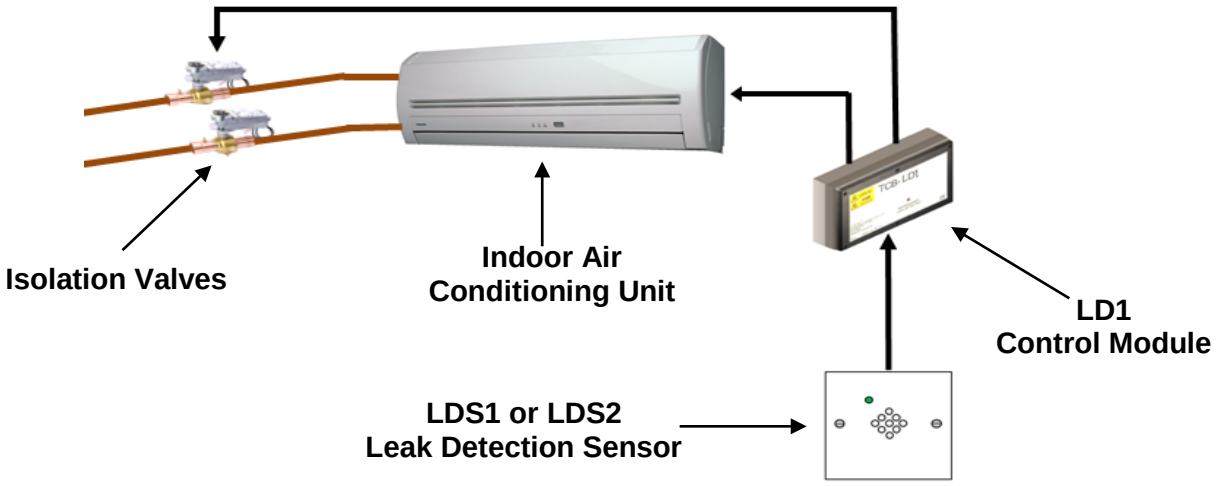

For both of the above installations, in the event of the leak detector operating there is both a visual and audible indication. The visual indication is via a flashing LED and the audible indication is via an internal buzzer. This fault code will be displayed on the local remote controller and any network based controls connected.

Installation Location: Refrigerants are significantly heavier than air. Therefore in order for the sensor to operate as effective as possible the refrigerant detector must be positioned at a low level inside the room, where the indoor air conditioning unit is fitted. See diagram below showing recommend installation guidelines.

The unit is designed to fit on the surface or over a standard single socket recessed box. The refrigerant detector PCB can be accommodated inside a standard single gang electrical back box (locally procured). The minimum depth of the back box is dependent on the style of face plate, however all designs will fit inside a 47mm deep enclosure , which can be flush mounted into the wall. Please refer to page 15, for further details.

Typical Hotel Room Application

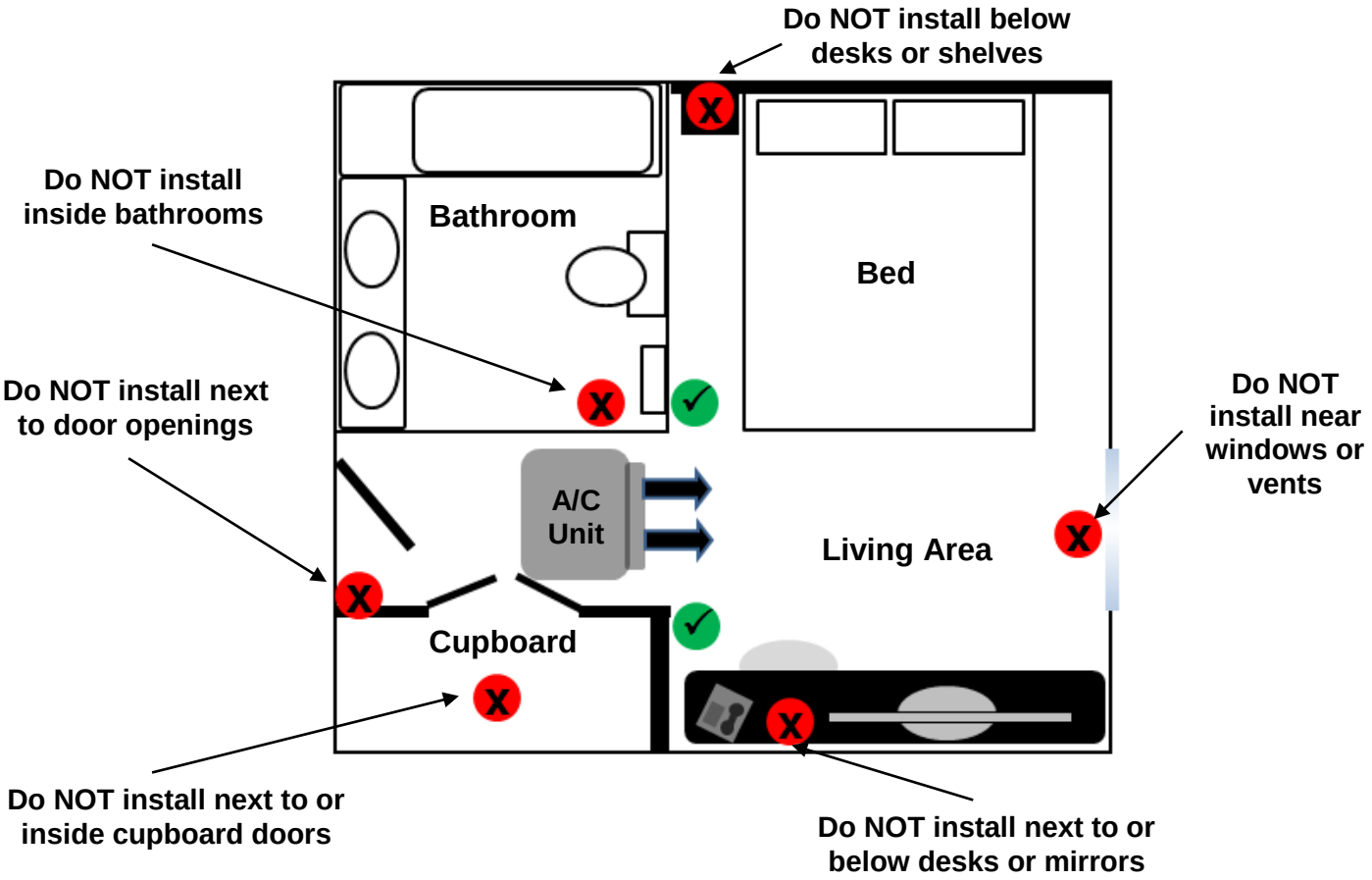

CAUTION

- The sensor element is sensitive to other gases/vapours other than R410a; do not spray any aerosols or similar substances near or directly at the sensor housing.
- Do not use solvent cleaners in proximity to the detector.
- Do not cover or restrict the air flow over the sensor by obstructing the vents, for example, with furniture.

LDS1 and LDS2 Height Installation Restrictions

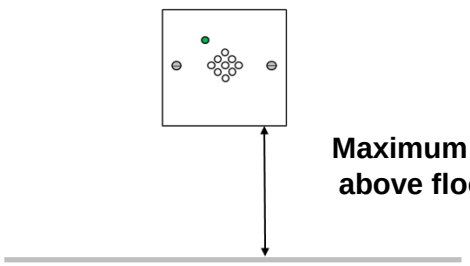

LDS1 and LDS2 Installation Mounting Method

Leak Detection Sensor Back Plate (Required Accessory for LDS1 or LDS2)		
EMEA Part No.	TCB-LDSBB1	TCB-LDSBB2
Manufacturer Part No.	DB2542	SB618
Mounting Method	Flush - Dry Lining (Plaster board 4-20mm deep)	Flush - Wall (concrete)
Mounting Depth	46mm	47mm
Height	86mm	68.3mm
Width	86mm	68.3mm
Material	Plastic	Metal
Photo		
LDS1 & LDSBB1 Example Installtion	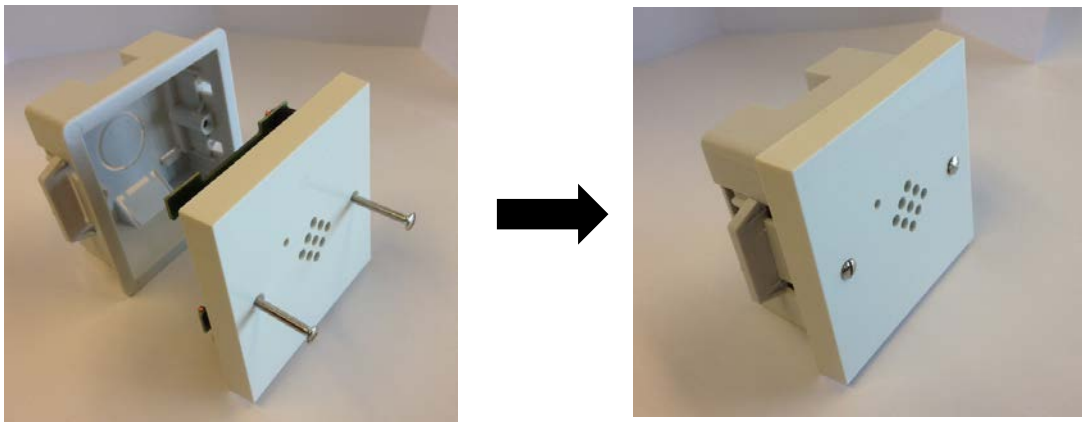	

3-5. ISOLATION VALVE INSTALLATION SUMMARY

- The isolating valves are to be fitted in accordance with the instructions supplied with them.
- Ensure the valves are located inside the building
- Do not install within the protected refrigerant detection area.
- Do not install inside an area that is noise sensitive.
- Connect the isolation valve wiring to the dedicated terminals within the LD1 control panel, as detailed within this installation manual.
- Where indoor pipework diameter is smaller than the valve pipe diameter, a reducer should be used (locally procured).

⚠ WARNING

- DO NOT OPEN THE ACTUATOR. IF THE ACTUATOR IS INOPERATIVE, REPLACE THE UNIT.
- Do not wire different types of actuators in parallel with these models.
- Personal injury/loss of life may occur if a procedure is not performed as specified.
- Equipment damage or loss of data may occur if the user does not follow a procedure as specified.
- To avoid injury or loss of life, pay attention to any hazardous voltage when performing checks.

IMPORTANT - Before commencing brazing of valve and pipe connection joints the valve must be in the "Open" position. Failure to manually open the valve may result in damage to internal components and malfunction in operation.

3-6. ISOLATION VALVE FITTING INSTRUCTIONS

1. To prevent damage to the valve assembly during installation, it is recommended that both the actuator (10) and the hub assembly (2-7) be removed prior to brazing. If this is not possible it is essential that the actuator and hub assembly be kept cool and isolated from the heat source, without the actuator getting wet.
2. To remove the actuator (10) from the hub assembly it is necessary to 1st loosen the adjustment lever (8) and then unscrew the two retaining Hex bolts (9) from the hub assembly (7). The actuator (10) can then be safely lifted and removed away from the hub (7).
3. The hub assembly (2-7) can then be removed from the valve body, by unscrewing the two retaining set screws (6) and then rotating the hub assembly in an anti-clockwise direction.
4. The ball valve (1) can then be brazed into the refrigeration pipework. Ensure the Schrader valve is removed (not fitted out of the box). It is recommended a wet rag is wrapped around the valve body, during brazing.
5. To refit Hub assembly and actuator reverse steps 1-4 above.

Additional Notes:

1. During the removal of the actuator (10), the shaft adapter inside the actuator may come loose. To refit align the shaft adapter with the Adjustment lever as shown in the picture. Ensure the raised tabs on the adapter are inserted last, as the act as the end stop
2. The Hub (7) needs not to be tightened all the way to the bottom of the valve body. Instead ensure orientation is correct and then secure with set screws (6) provided.

ISOLATION VALVE ASSEMBLY

Balloon #	Description
1	Ball Valve
2	Seal Cap Gasket
3	Sealed Hub Stem
4	O-ring Seals (2)
5	Seal Mechanism
6	Set Screws (2)
7	Hub
8	Adjustment Lever
9	Hex Head Bolts (2)
10	Actuator (Motor)

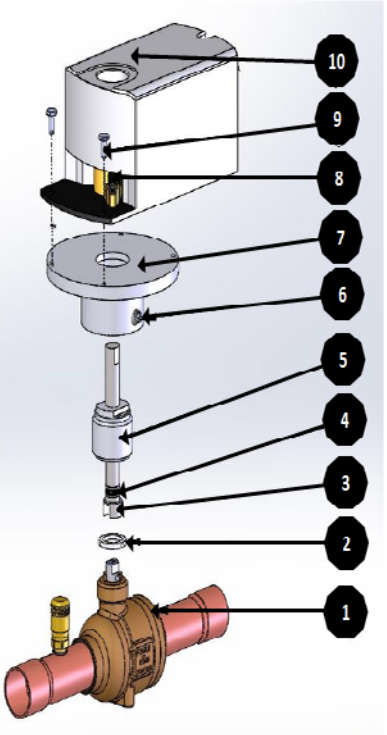

Shaft Adapter

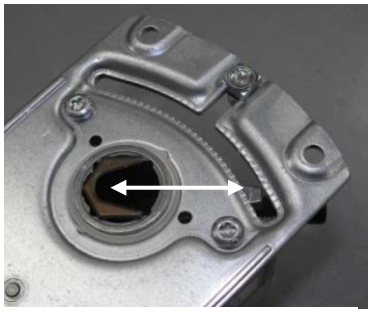

Shaft Adapter Aligned with Adjustment Lever

3-7. ISOLATION VALVE MANUAL OVERIDE PROCEDURE

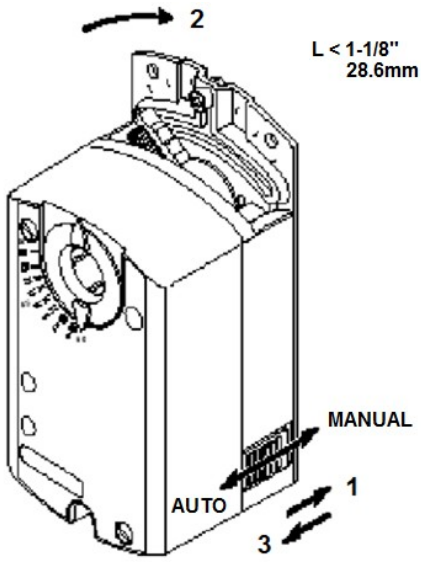

To move the valve and lock the position with no power present:

1. Slide the red manual override knob toward the back of the actuator.
2. Make adjustments to the valve position
3. Slide the red manual override knob toward the front of the actuator.

Once power is restored, the actuator returns to automatic control.

.

4 ELECTRICAL WORK

⚠ WARNING

1. **Using the specified wires, ensure to connect the wires, and fix wires securely so that the external tension to the wires do not affect the connecting part of the terminals.**
   Incomplete connection or fixation may cause a fire, etc.
2. **Be sure to connect earth wire (grounding work).**
   Incomplete grounding cause an electric shock.
   Do not connect ground wires to gas pipes, water pipes, lightning rods or ground wires for telephone wires.
3. **Appliance shall be installed in accordance with national wiring regulations.**
   Capacity shortage of power circuit or incomplete installation may cause an electric shock or a fire.

⚠ CAUTION

- If incorrect / incomplete wiring is carried out, it will cause an electrical fire or smoke.
- Be sure to install an earth leakage breaker that is not tripped by shock waves.
  If an earth leakage breaker is not installed, an electric shock may be caused.
- Be sure to use the cord clamps attached to the product.
- Do not damage or scratch the conductive core and inner insulator of power and inter-connecting wires when peeling them.
- Use the power cord and inter-connecting wire of specified thickness, type and protective devices required
- Never connect 220-240V power to the terminal blocks (Ⓤ1, Ⓤ2, Ⓐ, Ⓑ, etc) for control wiring (otherwise the system will fail).

REQUIREMENT

- For power supply wiring, strictly conform to the Local Regulation for each country.
- For wiring of power supply of the outdoor units, follow the Installation manual of each outdoor unit.
- Perform the electric wiring so that it does not come in to contact with the high-temperature part of the pipe.
  The coating may melt in an accident
- After connecting wires to the terminal blocks, provide a trap and fix the wires with the cord clamp.
- Run the refrigerant piping and control wiring line in the same line.
- Do not turn on the power of the indoor unit until vacuuming of the refrigerant pipes completes.

■ Power supply wire and communication wires specifications

Power supply wire and communication wires are procured locally.
For the power supply specifications, for both indoor and outdoor units, please refer to the installation manual attached to those units.

Cable size must be calculated for site condition and correct glands fitted. All cables should be in conduit or armoured cables correctly glanded. This has to be done by the site installer.

TCB-LD1-PE unit power supply

- For the power supply of the LD1 control module, prepare an exclusive power supply separated from that of the outdoor or indoor unit.
- Arrange the power supply, earth leakage breaker and main switch of the LD1 to be connected to the same outdoor unit so that they are commonly used.

▼ Power supply.

Power supply	220~240V ~ 50Hz
Installation fuse Rating	1 A
Power supply wiring	H07 RN-F or 60245 IEC 66 (1.5 mm^2 or more)

4-1. LDS1, LDS2 AND LD1 CONTROL WIRING

The LDS1 and LDS2 leak detectors can be powered either directly from the indoor unit PCB via CN61 or directly from the LD1 control module.
The cable that is supplied inside the LDS1 and LDS2 includes the additional functionality for indoor unit remote ON/OFF and locking. This is designed for integrating into a hotel room key card application.

4-2. LDS1 and LDS2 Wiring Connection Direct to Indoor PCB

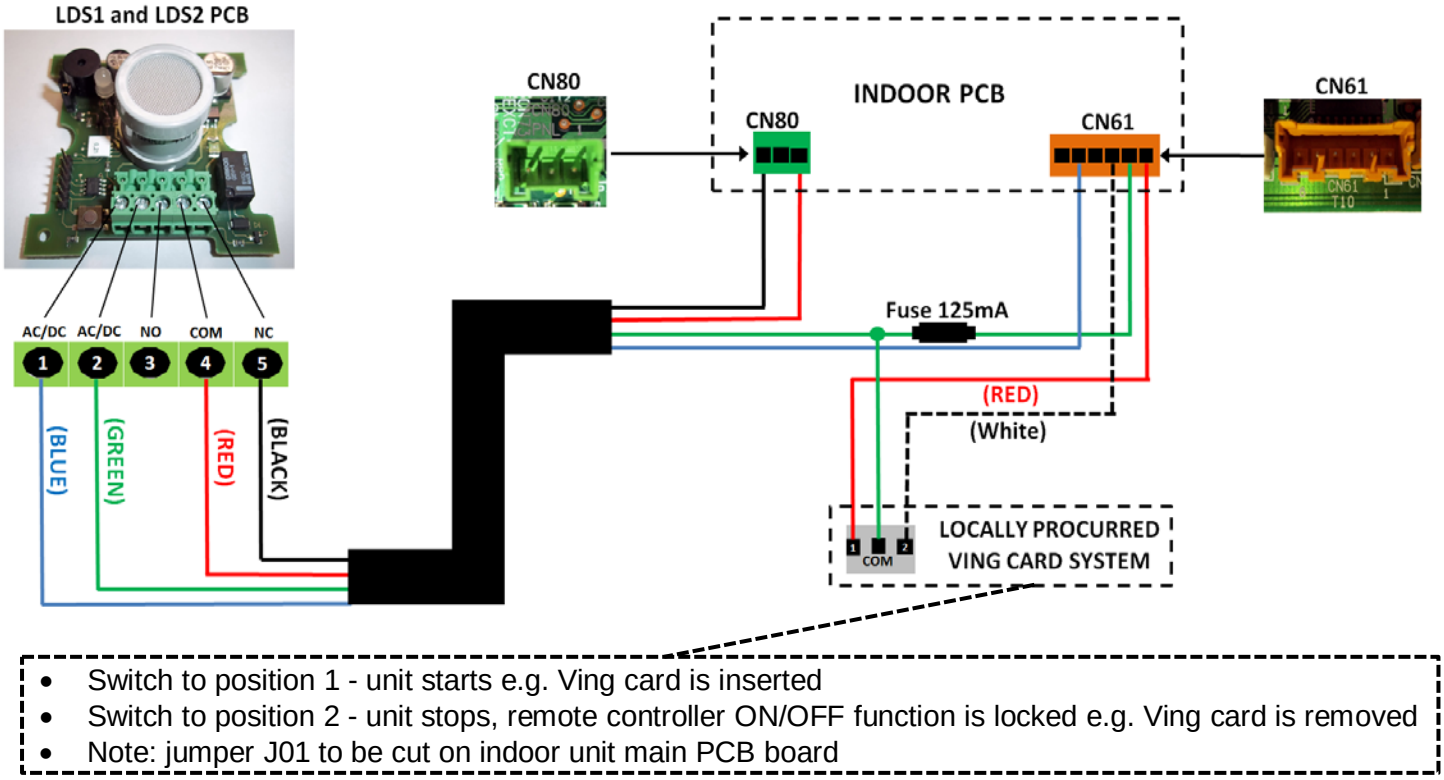

- Switch to position 1 - unit starts e.g. Ving card is inserted
- Switch to position 2 - unit stops, remote controller ON/OFF function is locked e.g. Ving card is removed
- Note: jumper J01 to be cut on indoor unit main PCB board

4-3. LDS1 and LDS2 Wiring Connection Direct to LD1

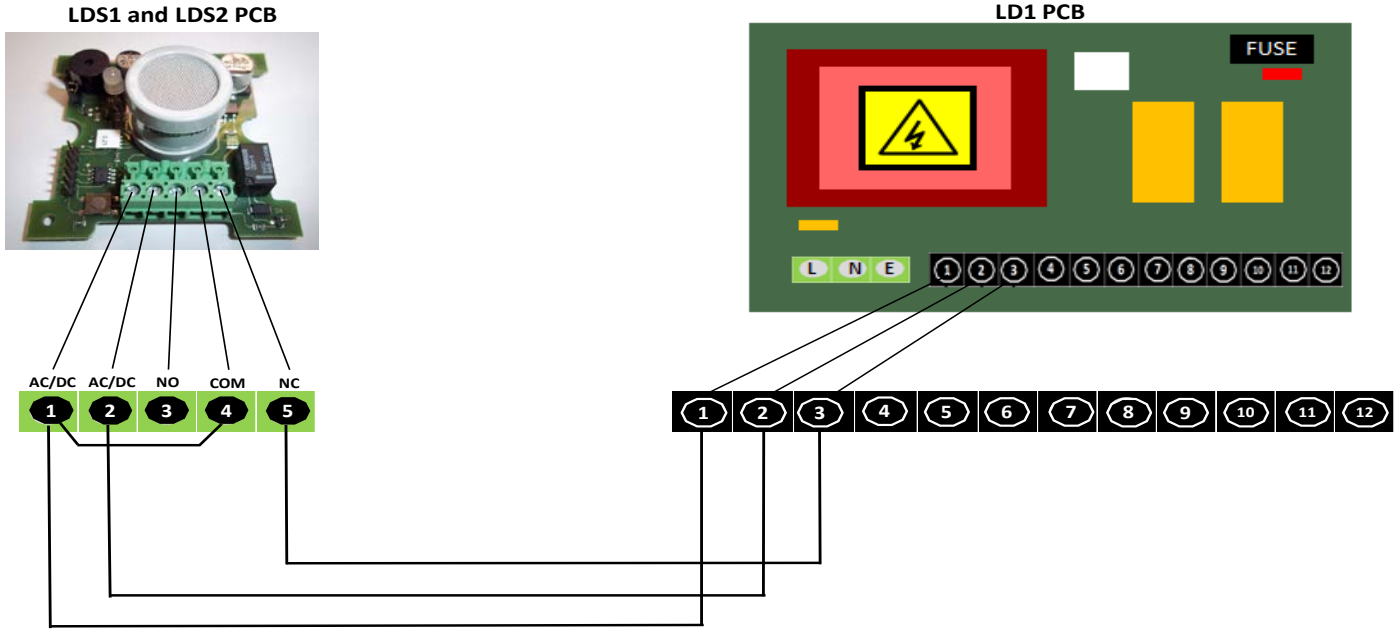

- All Wiring between LDS1 / LDS2 sensor and LD1 control Module to be locally procured.
- Connect the LDS1 or LDS2 to the LD1 control module using three core 0.75mm^2 cable, maximum 50m in length.
- Connect a link cable between terminal 1 and 4 on the LDS1 / LDS2 leak detector sensor.

4-4 Indoor PCB CN80 connection to LD1 Control Module

The CN80 wiring loom comes pre-installed onto the LD1, however in the event of removal the connection between CN80 (indoor PCB) and the LD1 control module is detailed below.

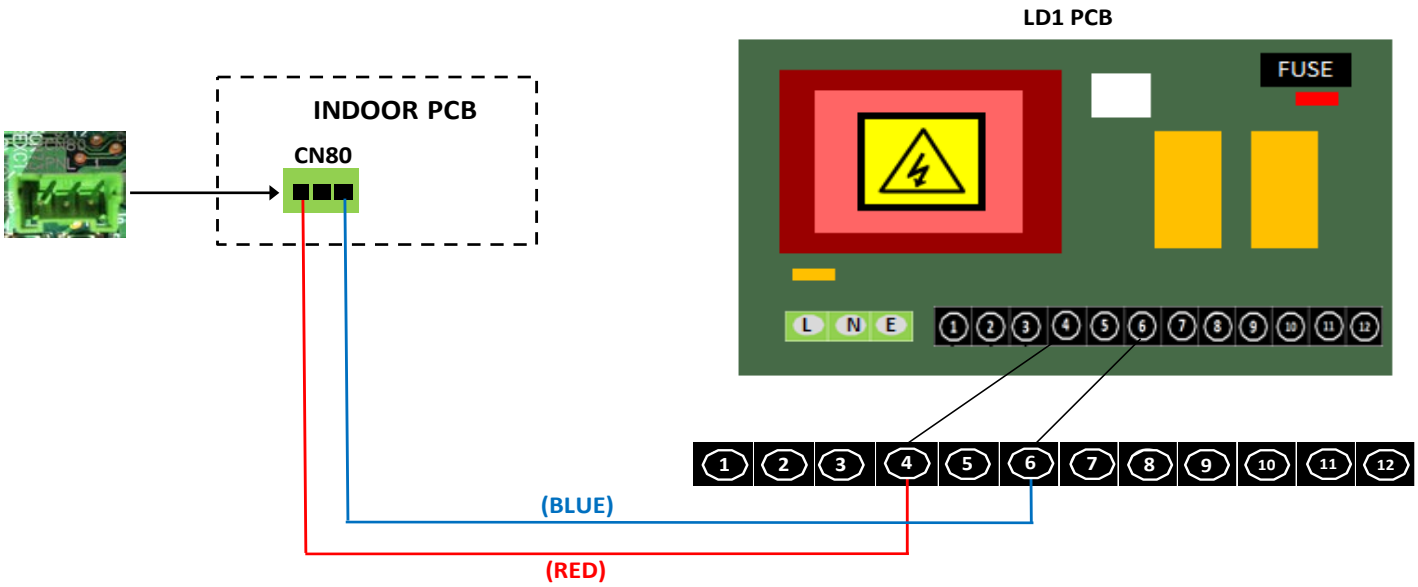

Note: Maximum cable length is 10m, 0.75mm^2

4-5 Isolation Valve Wiring Connection to LD1 Control Module

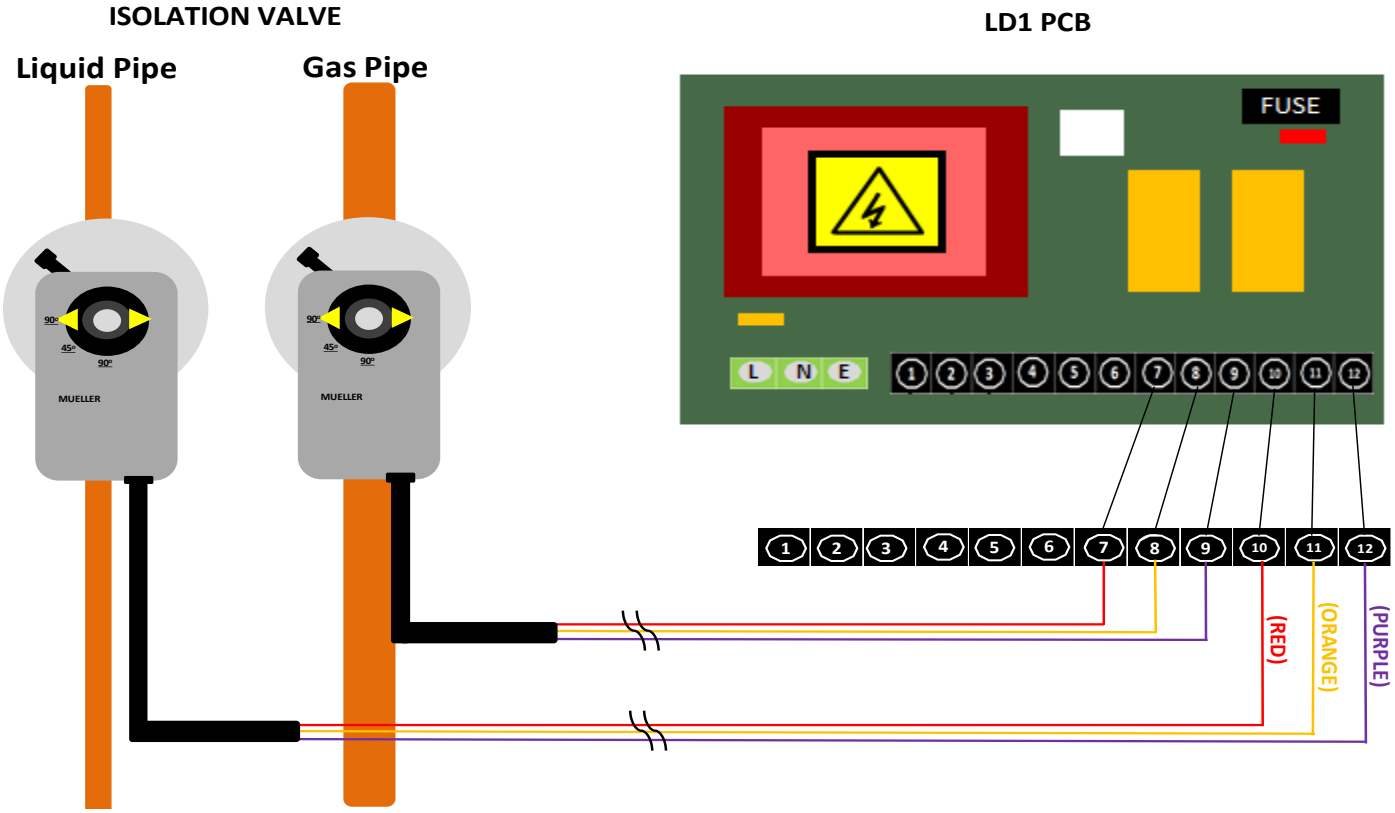

NOTE: Wiring loom between isolation valves and LD1 Control module may need to be extended locally, using three core 1.0mm^2 cable. Maximum cable length should not exceed 24m.

4-5 LDS1 / LDS2 and LD1 Control Circuit Wiring Diagram Inc Isolation Valve Connection Summary

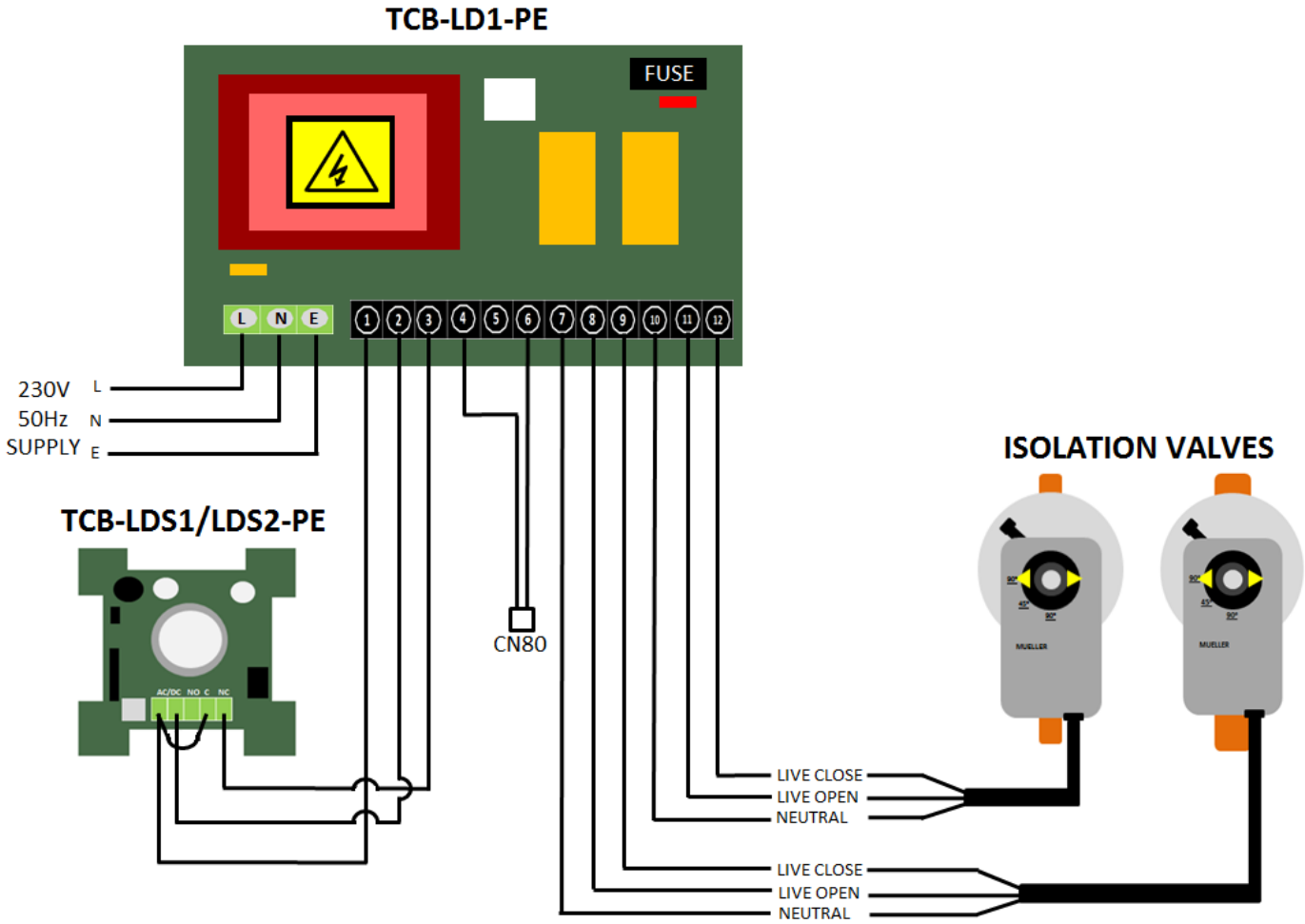

5 OPERATION TIMING DIAGRAMS

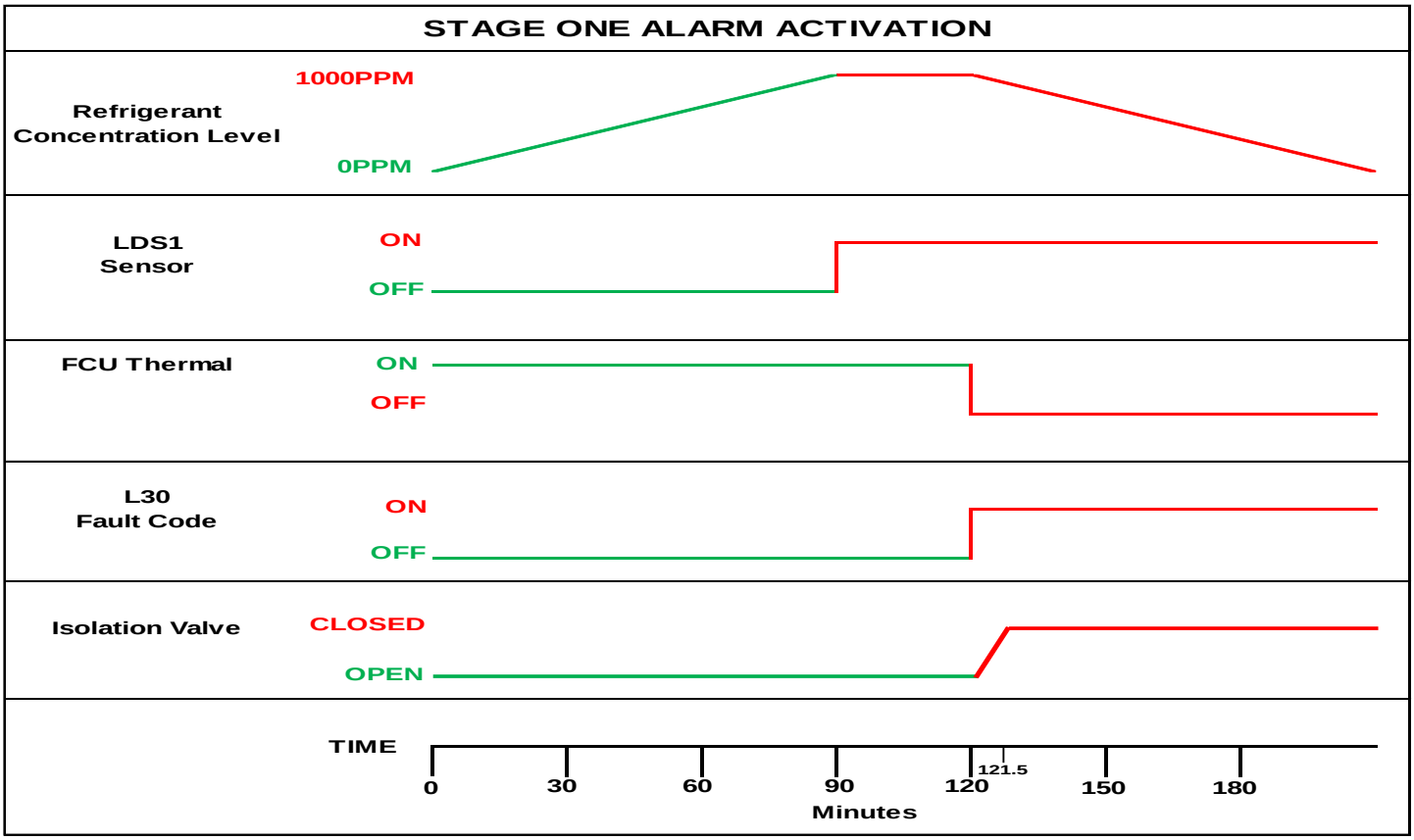

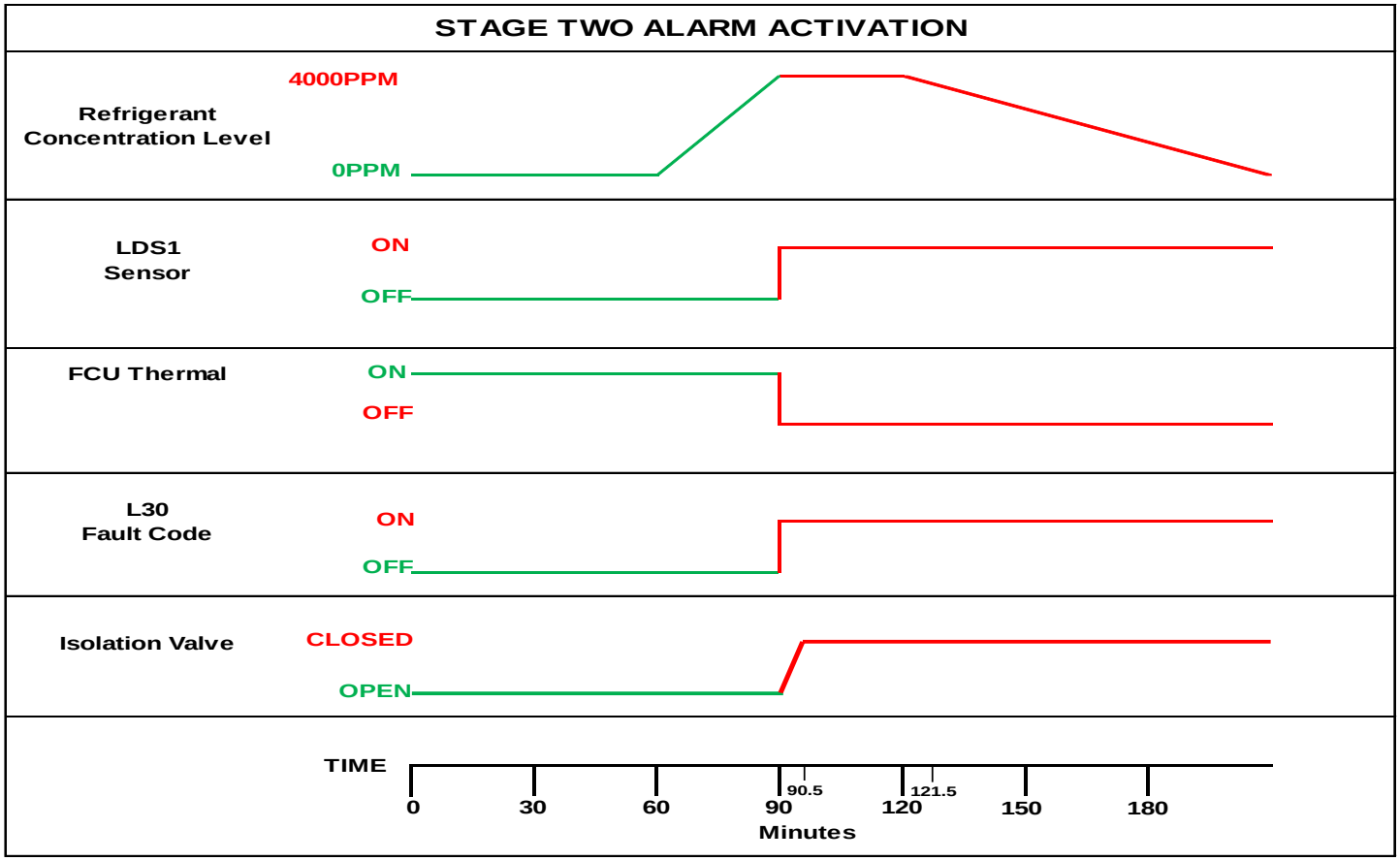

6 DECLARATION OF CONFORMITY

EC Declaration of Conformity

We Sarum Electronics Limited
Of
Clump Farm Industrial Estate, Shaftesbury Lane, Blandford, Dorset DT11 7TD

Declare that the Control Panels

Model: TCB-LD1

Meet all the relevant requirements of the following European Directives:

2004/108/EC	Electromagnetic Compatibility Directive
2006/95/EC	Low Voltage Directive

Having been examined to the requirements of the Electromagnetic Compatibility Directive 2004/108/EC and Low Voltage Directive 2006/95/EC by:

Safenet Limited
c/o Denford Garage
Denford
Kettering
Northamptonshire
NN14 4EQ, UK

Notification Number: 1674

Signed

14/4/15
Date

PRODUCTION MANAGER
Position

UK
Place

EC Declaration of Conformity

We Sarum Electronics Limited
Of
Clump Farm Industrial Estate, Shaftesbury Lane, Blandford, Dorset DT11 7TD

Declare that the units

Models: TCB-LDS1 & TCB-LDS2

Meet all the relevant requirements of the following European Directives:

2004/108/EC	Electromagnetic Compatibility Directive
2006/95/EC	Low Voltage Directive

S Cook — Signed

15/4/15 — Date

PRODUCTION MANAGER — Position

UK — Place

EC Declaration of Conformity

Sarum Electronics Limited
Of
Clump Farm Industrial Estate, Shaftesbury Lane, Blandford Forum, Dorset, DT11 7TD

Declare that the

Model: TCB-LDS1 Loom Kit

Meets all the relevant requirements of the following European Directives:

Is outside of the Low Voltage Directive as it connects to a volt free contact and the source voltage is SELV with a 125mA fuse for current limiting.

The EMC Directive should be verified with the relevant Air Conditioning documentation and the Leak Detector documentation.

Signed

14/4/15
Date

EC Declaration of Conformity

Sarum Electronics Limited
Of
Clump Farm Industrial Estate, Shaftesbury Lane, Blandford Forum, Dorset, DT11 7TD

Declare that the

Model: TCB-LDS2 Loom Kit

Meets all the relevant requirements of the following European Directives:

Is outside of the Low Voltage Directive as it connects to a volt free contact and the source voltage is SELV with a 125mA fuse for current limiting.

The EMC Directive should be verified with the relevant Air Conditioning documentation and the Leak Detector documentation.

Signed

14/4/15
Date

Toshiba Carrier (UK) Ltd
Porsham Close
Belliver Industrial Estate
Plymouth
Devon
United Kingdom
PL6 7DB

☎ +44 (0) 1752 753200
🖷 +44 (0) 1752 753222