TOSHIBA

Leading Innovation >>>

FILE No. A10-021-1

REVISION 1 : Mar.2012
Re-edit version.(file volume down)
Contents have NOT been changed.

Air to Air Heat Exchanger

SERVICE MANUAL

Concealed microcomputer control type

Model name:

VN-M150HE
VN-M250HE
VN-M350HE
VN-M500HE
VN-M650HE
VN-M800HE
VN-M1000HE

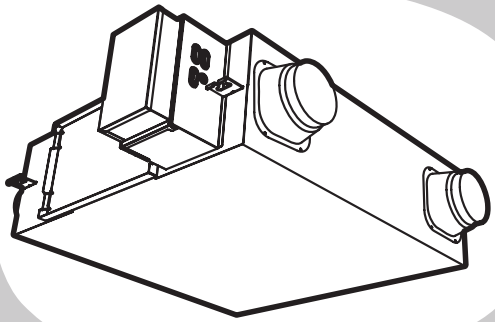

Contents

Original instruction

Please read carefully through these instructions that contain important information which complies with the “Machinery” Directive (Directive 2006/42/EC), and ensure that you understand them.
Some of the details provided in these instructions differ from the service manual, and the instructions provided here take precedence.

Generic Denomination: Air to Air Heat Exchanger

Definition of Qualified Installer or Qualified Service Person
The Air to Air Heat Exchanger must be installed, maintained, repaired and removed by a qualified installer or qualified service person. When any of these jobs is to be done, ask a qualified installer or qualified service person to do them for you.
A qualified installer or qualified service person is an agent who has the qualifications and knowledge described in the table below.

Agent	Qualifications and knowledge which the agent must have
Qualified installer	• The qualified installer is a person who installs, maintains, relocates and removes the Air to Air Heat Exchanger made by Toshiba Carrier Corporation. He or she has been trained to install, maintain, relocate and remove the Air to Air Heat Exchanger made by Toshiba Carrier Corporation or, alternatively, he or she has been instructed in such operations by an individual or individuals who have been trained and is thus thoroughly acquainted with the knowledge related to these operations. • The qualified installer who is allowed to do the electrical work involved in installation, relocation and removal has the qualifications pertaining to this electrical work as stipulated by the local laws and regulations, and he or she is a person who has been trained in matters relating to electrical work on the Air to Air Heat Exchanger made by Toshiba Carrier Corporation or, alternatively, he or she has been instructed in such matters by an individual or individuals who have been trained and is thus thoroughly acquainted with the knowledge related to this work. • The qualified installer who is allowed to work at heights has been trained in matters relating to working at heights with the Air to Air Heat Exchanger made by Toshiba Carrier Corporation or, alternatively, he or she has been instructed in such matters by an individual or individuals who have been trained and is thus thoroughly acquainted with the knowledge related to this work.
Qualified service person	• The qualified service person is a person who installs, repairs, maintains, relocates and removes the Air to Air Heat Exchanger made by Toshiba Carrier Corporation. He or she has been trained to install, repair, maintain, relocate and remove the Air to Air Heat Exchanger made by Toshiba Carrier Corporation or, alternatively, he or she has been instructed in such operations by an individual or individuals who have been trained and is thus thoroughly acquainted with the knowledge related to these operations. • The qualified service person who is allowed to do the electrical work involved in installation, repair, relocation and removal has the qualifications pertaining to this electrical work as stipulated by the local laws and regulations, and he or she is a person who has been trained in matters relating to electrical work on the Air to Air Heat Exchanger made by Toshiba Carrier Corporation or, alternatively, he or she has been instructed in such matters by an individual or individuals who have been trained and is thus thoroughly acquainted with the knowledge related to this work. • The qualified service person who is allowed to work at heights has been trained in matters relating to working at heights with the Air to Air Heat Exchanger made by Toshiba Carrier Corporation or, alternatively, he or she has been instructed in such matters by an individual or individuals who have been trained and is thus thoroughly acquainted with the knowledge related to this work.

Definition of Protective Gear

When the Air to Air Heat Exchanger is to be transported, installed, maintained, repaired or removed, wear protective gloves and 'safety' work clothing.
In addition to such normal protective gear, wear the protective gear described below when undertaking the special work detailed in the table below.
Failure to wear the proper protective gear is dangerous because you will be more susceptible to injury, burns, electric shocks and other injuries.

Work undertaken	Protective gear worn
All types of work	Protective gloves 'Safety' working clothing
Electrical-related work	Gloves to provide protection for electricians and from heat
Work done at heights (50 cm or more)	Helmets for use in industry
Transportation of heavy objects	Shoes with additional protective toe cap

The important contents concerned to the safety are described on the product itself and on this Service Manual. Please read this Service Manual after understanding the described items thoroughly in the following contents (Indications/Illustrated marks), and keep them.

[Explanation of indications]

Indication	Explanation
⚠ **DANGER**	Indicates contents assumed that an imminent danger causing a death or serious injury of the repair engineers and the third parties when an incorrect work has been executed.
⚠ **WARNING**	Indicates possibilities assumed that a danger causing a death or serious injury of the repair engineers, the third parties, and the users due to troubles of the product after work when an incorrect work has been executed.
⚠ **CAUTION**	Indicates contents assumed that an injury or property damage (*) may be caused on the repair engineers, the third parties, and the users due to troubles of the product after work when an incorrect work has been executed.

* Property damage: Enlarged damage concerned to property, furniture, and domestic animal/pet

[Explanation of illustrated marks]

Mark	Explanation
⃠	Indicates prohibited items (Forbidden items to do) The sentences near an illustrated mark describe the concrete prohibited contents.
●	Indicates mandatory items (Compulsory items to do) The sentences near an illustrated mark describe the concrete mandatory contents.
△	Indicates cautions (Including danger/warning) The sentences or illustration near or in an illustrated mark describe the concrete cautious contents.

Warning Indications on the Air to Air Heat Exchanger Unit

[Confirmation of warning label on the main unit]
Confirm that labels are indicated on the specified positions.
If removing the label during parts replace, stick it as the original.

Warning indication	Description
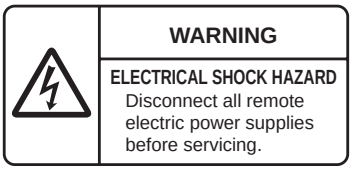	**WARNING** **ELECTRICAL SHOCK HAZARD** Disconnect all remote electric power supplies before servicing.
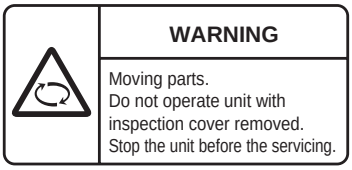	**WARNING** Moving parts. Do not operate unit with inspection cover removed. Stop the unit before the servicing.
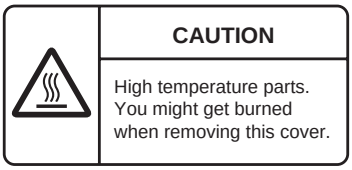	**CAUTION** High temperature parts. You might get burned when removing this cover.

Precautions for Safety

The manufacturer shall not assume any liability for the damage caused by not observing the description of this manual.

⚠ DANGER

Turn off breaker.	Before carrying out the installation, maintenance, repair or removal work, be sure to set the circuit breaker for Air to Air Heat Exchanger to the OFF position. Otherwise, electric shocks may result.
	Before opening the electrical control cover or inspection cover of the Air to Air Heat Exchanger, set the circuit breaker to the OFF position. Failure to set the circuit breaker to the OFF position may result in electric shocks through contact with the interior parts. Only a qualified installer (*1) or qualified service person (*1) is allowed to remove the electrical control cover or inspection cover of the Air to Air Heat Exchanger and do the work required.
	When cleaning the filter or heat exchange element of the Air to Air Heat Exchanger, set the circuit breaker to OFF without fail, and place a “Work in progress” sign near the circuit breaker before proceeding with the work.
	When you have noticed that some kind of trouble (such as when an error display has appeared, there is a smell of burning, abnormal sounds are heard, water is leaking) has occurred in the Air to Air Heat Exchanger, do not touch the Air to Air Heat Exchanger yourself but set the circuit breaker to the OFF position, and contact a qualified service person. Take steps to ensure that the power will not be turned on (by marking “out of service” near the circuit breaker, for instance) until qualified service person arrives. Continuing to use the Air to Air Heat Exchanger in the trouble status may cause mechanical problems to escalate or result in electric shocks or other failure.
Electric shock hazard	When you access inside of the electrical control cover to repair electric parts, wait for about five minutes after turning off the breaker. Do not start repairing immediately.Otherwise you may get electric shock by touching terminals of high-voltage capacitors. Natural discharge of the capacitor takes about five minutes.
Prohibition	Place a “Work in progress” sign near the circuit breaker while the installation, maintenance, repair or removal work is being carried out. There is a danger of electric shocks if the circuit breaker is set to ON by mistake.
	Before operating the Air to Air Heat Exchanger after having completed the work, check that the electrical control cover and inspection cover are closed, and set the circuit breaker to the ON position. You may receive an electric shock if the power is turned on without first conducting these checks.
Stay on protection	If, in the course of carrying out repairs, it becomes absolutely necessary to check out the electrical parts with the electrical control cover and inspection cover removed in order to find out exactly where the trouble lies, wear insulated heat-resistant gloves, insulated boots and insulated work overalls, and take care to avoid touching any live parts. You may receive an electric shock if you fail to heed this warning. Only qualified service person (*1) is allowed to do this kind of work.

⚠ WARNING

General	Before starting to repair the Air to Air Heat Exchanger, read carefully through the Service Manual, and repair the Air to Air Heat Exchanger by following its instructions.
	Only qualified service person (*1) is allowed to repair the Air to Air Heat Exchanger. Repair of the Air to Air Heat Exchanger by unqualified person may give rise to a fire, electric shocks, injury, water leaks and/or other problems.
	Only a qualified installer (*1) or qualified service person (*1) is allowed to carry out the electrical work of the Air to Air Heat Exchanger. Under no circumstances must this work be done by an unqualified individual since failure to carry out the work properly may result in electric shocks and/or electrical leaks.
	Wear protective gloves and safety work clothing during installation, servicing and removal.
	When repairing the electrical parts or undertaking other electrical jobs, wear gloves to provide protection for electricians and from heat. Failure to wear this protective gear may result in burn.
	Electrical wiring work shall be conducted according to law and regulation in the community and installation manual. Failure to do so may result in electrocution or short circuit.
	Only a qualified installer (*1) or qualified service person (*1) is allowed to undertake work at heights using a stand of 50 cm or more or to remove the electrical control cover or inspection cover of the Air to Air Heat Exchanger to undertake work.
	When working at heights, use a ladder which complies with the ISO 14122 standard, and follow the procedure in the ladder's instructions. Also wear a helmet for use in industry as protective gear to undertake the work.
	When working at heights, put a sign in place so that no-one will approach the work location, before proceeding with the work. Parts and other objects may fall from above, possibly injuring a person below.
	When executing address setting, test run, or troubleshooting through the checking window on the electric parts box, put on insulated gloves to provide protection from electric shock. Otherwise you may receive an electric shock.
	Use a hand track or forklift to carry the unit. When carrying it by human power, have four persons or more; otherwise, you may strain your back.
	When transporting the Air to Air Heat Exchanger, wear shoes with protective toe caps, protective gloves and other protective clothing.
	When transporting the Air to Air Heat Exchanger, do not take hold of the bands around the packing carton. You may injure yourself if the bands should break.
	Use wiring that meets the specifications in the Installation Manual and the stipulations in the local regulations and laws. Use of wiring which does not meet the specifications may give rise to electric shocks, electrical leakage, smoking and/or a fire.
	Exchange to parts specified in service manual, which meet the specification or listed in parts list of service manual. Failure to use specified parts may result in electrical shock, smoke, and/or fire.
	Confirm whether there is a risk of the Air to Air Heat Exchanger falling down during maintenance or repairing work. Inspect the Air to Air Heat Exchanger unit for any falling hazard of the unit before maintenance or repair.
	Before you open the Supply/Exhaust air grill, set the circuit breaker to the OFF position. Otherwise, your hand may be caught in the rotating parts inside and an injury may result.
Check earth wires.	After completing the repair or relocation work, check that the earth wires are connected properly.
	Be sure to connect earth wire. (Grounding work) Incomplete earthing causes an electric shock. Do not connect earth wires to gas pipes, water pipes, and lightning rods or earth wires for telephone wires.
Prohibition of modification.	Do not modify the products. Do not also disassemble or modify the parts. It may cause a fire, electric shock or injury.
Use specified parts.	When any of the electrical parts are to be replaced, ensure that the replacement parts satisfy the specifications given in the Service Manual (or use the parts contained on the parts list in the Service Manual). Use of any parts which do not satisfy the required specifications may give rise to electric shocks, smoking and/or a fire.

Do not bring a child close to the equipment.	If, in the course of carrying out repairs, it becomes absolutely necessary to check out the electrical parts with the electrical control cover of one or more of the Air to Air Heat Exchanger removed in order to find out exactly where the trouble lies, put a sign in place so that no-one will approach the work location before proceeding with the work. Third-party individuals may enter the work site and receive electric shocks if this warning is not heeded.
Insulating measures	Connect the cut-off lead wires with crimp contact, etc., put the closed end side upward and then apply a water-cut method, otherwise a leak or production of fire is caused at the users' side.
Assembly/ Wiring	After repair work, surely assemble the disassembled parts, and connect and lead the removed wires as before. Perform the work so that the electrical control cover does not catch the inner wires. If incorrect assembly or incorrect wire connection was done, a disaster such as a leak or fire is caused at user's side.
Insulator check	After the work has finished, be sure to use an insulation tester set (500V Megger) to check the resistance is 1MΩ or more between the charge section and the non-charge metal section (Earth position). If the resistance value is low, a disaster such as a leak or electric shock is caused at user's side.
Check after repair	Once the repair work has been completed, check for the insulation resistance. Then perform a trial run to check that the Air to Air Heat Exchanger is running properly.
	After repair work has finished, check there is no trouble. If check is not executed, a fire, electric shock or injury may be caused. For a check, turn off the power breaker.
	After repair work (installation of electrical control cover and inspection cover) has finished, execute a test run to check there is no generation of smoke or abnormal sound. If check is not executed, a fire or an electric shock is caused. Before test run, install the electrical control cover and inspection cover.
	Be sure to fix the screws back which have been removed for installation or other purposes.
Check after reinstallation	Only a qualified installer (*1) or qualified service person (*1) is allowed to relocate the Air to Air Heat Exchanger. It is dangerous for the Air to Air Heat Exchanger to be relocated by an unqualified individual since a fire, electric shocks, injury, water leakage, noise and/or vibration may result.
	Check the following items after reinstallation. 1) The earth wire is correctly connected. 2) The power cord is not caught in the product. 3) There is no inclination or unsteadiness and the installation is stable. If check is not executed, a fire, an electric shock or an injury is caused.
Installation	Only a qualified installer (*1) or qualified service person (*1) is allowed to install the Air to Air Heat Exchanger. If the Air to Air Heat Exchanger is installed by an unqualified individual, a fire, electric shocks, injury, water leakage, noise and/or vibration may result.
	Before starting to install the Air to Air Heat Exchanger, read carefully through the Installation Manual, and follow its instructions to install the Air to Air Heat Exchanger.
	Be sure to use the company-specified products for the separately purchased parts. Use of non-specified products may result in fire, electric shock, water leakage or other failure. Have the installation performed by a qualified installer.
	Do not supply power from the power terminal block equipped on the outdoor unit to another outdoor unit. Capacity overflow may occur on the terminal block and may result in fire.
	Do not install the Air to Air Heat Exchanger in a location that may be subject to a risk of expire to a combustible gas. If a combustible gas leaks and becomes concentrated around the unit, a fire may occur.
	Install the Air to Air Heat Exchanger at least 2.5 m above the floor level since otherwise the users may injure themselves or receive electric shocks if they poke their fingers or other objects into the Air to Air Heat Exchanger while the it is running.
	Install a circuit breaker that meets the specifications in the installation manual and the stipulations in the local regulations and laws.
	Install the circuit breaker where it can be easily accessed by agent.
	When installing a circuit breaker outdoors, install one which is designed to be used outdoors.
	Do not place any combustion appliance in a place where it is directly exposed to the wind of Air to Air Heat Exchanger, otherwise it may cause imperfect combustion.

Relocation

- Only a qualified installer (*1) or qualified service person (*1) is allowed to relocate the Air to Air Heat Exchanger. It is dangerous for the Air to Air Heat Exchanger to be relocated by an unqualified individual since a fire, electric shocks, injury, water leakage, noise and/or vibration may result.

(*1) Refer to the “Definition of Qualified Installer or Qualified Service Person.”

Specifications

Model	Sound power level (dBA)	Weight (kg)
VN-M150HE, M250HE	*	36
VN-M350HE	*	38
VN-M500HE, M650HE	*	53
VN-M800HE, M1000HE	*	70

* Under 70 dBA

Declaration of Incorporation of Partly Completed Machinery

Manufacturer: Toshiba Carrier Corporation
336 Tadehara, Fuji-shi, Shizuoka-ken 416-8521 JAPAN

Representative/
TCF holder: Toshiba Carrier UK Ltd.
Porsham Close, Belliver Industrial Estate,
PLYMOUTH, Devon, PL6 7DB.
United Kingdom

Hereby declares that the machinery described below:

Generic Denomination: Air to Air Heat Exchanger

Model/type: VN-M150HE
VN-M250HE
VN-M350HE
VN-M500HE
VN-M650HE
VN-M800HE
VN-M1000HE

Commercial name: TOSHIBA Air to Air Heat Exchanger

Complies with the provisions of the “Machinery” Directive (Directive 2006/42/EC) and the regulations transposing into national law.

Must not be put into service until the final machinery into which it is to be incorporated has been declared in conformity with the provisions of Machinery Directive, where appropriate.

NOTE

This declaration becomes invalid if technical or operational modifications are introduced without the manufacturer’s consent.

1 Features

■ Main features

◆ Power saving ventilation

The cost of cooling and heating is reduced thanks to the unit efficiently retrieving thermal energy (outdoor air load) which has been lost during ordinary ventilation.

◆ Space saving

Significant reduction of outdoor air load and the ability to retrieve thermal energy enable the production of smaller air conditioning devices.

◆ Humidity control

When cooling, highly humid outdoor air is conditioned to near the humidity of the dehumidified (cooled) indoor air before being supplied.
When heating, moisture from the return air is transferred to the dry outdoor air before the outdoor air is supplied.

◆ Comfortable ventilation

Ventilation without big changes in temperature is realized.
In addition, stable ventilation is possible even in an air tight room due to simultaneous air intake and expulsion.

◆ Sound insulation

Air trunks and heat exchange elements provide sound insulation.
They reduce the incoming of outdoor noise and the outward flow of sounds indoor and help keep the office or shop, and their surroundings quiet.

◆ Easy installation

The linear air supplying/exhausting method enables simple design and installation.
Inverted installation is possible and only one inspection slot is required for two units.
A complete inspection is possible through a single inspection slot.

◆ Other

The filter has excellent dust filtering performance (mass spectrometry 82%).
The air volume can be switched between Extra High and High.
The ventilation balance of air supplying and air exhausting can be changed.
The filter inspection display function calculates the total running time and prompts you through the remote controller to inspect the filter.
The cold mode function automatically makes the air supplying motor run intermittently when the outdoor air temperature is -10°C or lower.
The timer function allows you to set the unit to start/stop operation at the specified time.
The separately sold central controller enables central control of 128 groups.
The separately sold wired remote controller enables group operation control of up to 8 units.
The unit can operate in cooperation with an air-conditioner (SMMS series, DI/SDI series).

■ About ventilation modes

The unit has three ventilation modes.

- Heat exchange mode
  Exchanging heat between the outdoor air and return air and making the temperature and humidity of the outdoor air closer to those of the return air before supplying it.
- Bypass mode
  Outdoor air is taken into a room as it is. This mode is mainly used in spring and summer.
- Automatic mode

1. For an Air to Air Heat Exchanger system
   The heat exchange mode and the bypass mode are automatically switched between following the information from the return air and outdoor air temperature sensors in the unit.
2. For an Air to Air Heat Exchanger system linked with air conditioners
   The heat exchange mode and the bypass mode are automatically switched between depending on the operation status of the air conditioner (cooling, heating, dry, fan, or temperature setting) and the information from the return air and outdoor air temperature sensors in the unit.

⚠ CAUTION

If the outdoor air temperature becomes about to 15°C or less in [Automatic mode] or [Bypass mode], the system will automatically start to run in [Heat exchange mode] regardless of the mode setting to prevent condensation in the Air to Air Heat Exchanger.
* The indication of the ventilation mode setting does not change.

2 Specifications

■ Concealed microcomputer control type

Item			Model No. / Fan Speed		VN-M150HE	VN-M250HE	VN-M350HE	VN-M500HE	VN-M650HE	VN-M800HE	VN-M1000HE
Type					Concealed type						
Power Supply (V)					Single phase 220-240V~,50Hz 220V~,60Hz						
Characteristics	Power consumption (W)	Heat Exchange Mode	(Extra high)	50Hz	68-78	123-138	165-182	214-238	262-290	360-383	532-569
				60Hz	76	131	209	260	307	446	622
			High	50Hz	59-67	99-111	135-145	176-192	240-258	339-353	494-538
				60Hz	65	105	162	206	283	408	589
			Low	50Hz	42-47	52-59	82-88	128-142	178-191	286-300	353-370
				60Hz	45	54	94	144	206	333	411
		Bypass Mode	(Extra high)	50Hz	68-78	123-138	165-182	214-238	262-290	360-383	532-569
				60Hz	76	131	209	260	307	446	622
			High	50Hz	59-67	99-111	135-145	176-192	240-258	339-353	494-538
				60Hz	65	105	162	206	283	408	589
			Low	50Hz	42-47	52-59	82-88	128-142	178-191	286-300	353-370
				60Hz	45	54	94	144	206	333	411
	Current (A)	Heat Exchange Mode	(Extra high)	50Hz	0.31-0.33	0.58-0.61	0.76-0.76	0.99-1.00	1.25-1.30	1.67-1.63	2.47-2.46
				60Hz	0.36	0.60	0.99	1.20	1.40	2.03	2.84
			High	50Hz	0.27-0.28	0.47-0.49	0.62-0.61	0.81-0.81	1.14-1.13	1.57-1.50	2.31-2.28
				60Hz	0.28	0.49	0.74	0.94	1.30	1.85	2.69
			Low	50Hz	0.20-0.20	0.25-0.26	0.38-0.37	0.59-0.60	1.25-1.30	1.31-1.27	1.62-1.57
				60Hz	0.20	0.25	0.43	0.66	0.95	1.52	1.87
		Bypass Mode	(Extra high)	50Hz	0.31-0.33	0.58-0.61	0.76-0.76	0.99-1.00	1.25-1.30	1.67-1.63	2.47-2.46
				60Hz	0.36	0.60	0.99	1.20	1.40	2.03	2.84
			High	50Hz	0.27-0.28	0.47-0.49	0.62-0.61	0.81-0.81	1.14-1.13	1.57-1.50	2.31-2.28
				60Hz	0.28	0.49	0.74	0.94	1.30	1.85	2.69
			Low	50Hz	0.20-0.20	0.25-0.26	0.38-0.37	0.59-0.60	1.25-1.30	1.31-1.27	1.62-1.57
				60Hz	0.20	0.25	0.43	0.66	0.95	1.52	1.87
	Maximum running Current (A)	Heat Exchange Mode	(Extra high)	50Hz	0.32-0.33	0.61-0.65	0.81-0.82	1.19-1.23	1.37-1.41	2.15-2.23	2.89-2.94
				60Hz	0.36	0.65	1.09	1.38	1.59	2.40	3.37
			High	50Hz	0.27-0.28	0.46-0.49	0.61-0.62	0.87-0.91	1.17-1.20	1.84-1.94	2.57-2.61
				60Hz	0.30	0.47	0.73	0.96	1.34	2.01	2.95
			Low	50Hz	0.20-0.21	0.25-0.26	0.42-0.44	0.64-0.68	0.90-0.95	1.49-1.58	1.85-1.87
				60Hz	0.21	0.25	0.45	0.68	0.98	1.59	1.96
		Bypass Mode	(Extra high)	50Hz	0.32-0.33	0.61-0.65	0.81-0.82	1.19-1.23	1.37-1.41	2.15-2.23	2.89-2.94
				60Hz	0.36	0.65	1.09	1.38	1.59	2.40	3.37
			High	50Hz	0.27-0.28	0.46-0.49	0.61-0.62	0.87-0.91	1.17-1.20	1.84-1.94	2.57-2.61
				60Hz	0.30	0.47	0.73	0.96	1.34	2.01	2.95
			Low	50Hz	0.20-0.21	0.25-0.26	0.42-0.44	0.64-0.68	0.90-0.95	1.49-1.58	1.85-1.87
				60Hz	0.21	0.25	0.45	0.68	0.98	1.59	1.96

Item			Fan Speed \ Model No.		VN-M150HE	VN-M250HE	VN-M350HE	VN-M500HE	VN-M650HE	VN-M800HE	VN-M1000HE
Characteristics	Air Volume (m^3/h)		(Extra high)	50Hz	150	250	350	500	650	800	1000
				60Hz	150	250	350	500	650	800	1000
			High	50Hz	150	250	350	500	650	800	1000
				60Hz	150	250	350	500	650	800	1000
			Low	50Hz	110	155	210	390	520	700	755
				60Hz	110	155	210	390	520	700	755
	External Static Pressure (Pa)	Heat Exchange Mode	(Extra high)	50Hz	82-102	80-98	114-125	134-150	91-107	142-158	130-150
				60Hz	99	97	167	181	134	171	185
			High	50Hz	52-78	34-65	56-83	69-99	58-82	102-132	97-122
				60Hz	59	38	33	63	68	102	120
			Low	50Hz	47-64	28-40	65-94	62-92	61-96	76-112	84-127
				60Hz	46	22	39	44	52	58	55
		Bypass Mode	(Extra high)	50Hz	82-102	80-98	114-125	134-150	91-107	142-158	130-150
				60Hz	99	97	167	181	134	171	185
			High	50Hz	52-78	34-65	56-83	69-99	58-82	102-132	97-122
				60Hz	59	38	33	63	68	102	120
			Low	50Hz	47-64	28-40	65-94	62-92	61-96	76-112	84-127
				60Hz	46	22	39	44	52	58	55
	Sound pressure level (dB)	Heat Exchange Mode	(Extra high)	50Hz	26.0-28.0	29.5-30.0	34.0-35.0	32.5-34.0	34.0-36.0	37.0-38.5	39.5-40.5
				60Hz	27.5	31.5	35.5	33.5	35.5	38	41.5
			High	50Hz	24.0-25.5	25.0-27.0	30.0-32.0	29.5-31.0	33.0-34.0	35.5-37.0	38.5-40.0
				60Hz	24.5	25	29.5	29	34	35	39
			Low	50Hz	20.0-22.0	21.0-22.0	27.0-29.0	26.0-29.0	31.0-32.5	33.5-35.0	34.0-35.5
				60Hz	20	21	23.5	24.5	29.5	32.5	33.5
		Bypass Mode	(Extra high)	50Hz	26.0-28.0	29.5-30.0	34.0-35.0	32.5-34.0	34.0-36.0	37.0-38.5	39.5-40.5
				60Hz	27.5	31.5	35.5	33.5	35.5	38	41.5
			High	50Hz	24.0-25.5	25.0-27.0	30.0-32.0	29.5-31.0	33.0-34.0	35.5-37.0	38.5-40.0
				60Hz	24.5	25	29.5	29	34	35	39
			Low	50Hz	20.0-22.0	21.0-22.0	27.0-29.0	26.0-29.0	31.0-32.5	33.5-35.0	34.0-35.5
				60Hz	20	21	23.5	24.5	29.5	32.5	33.5
	Temperature Exchange Efficiency (%)		(Extra high)	50Hz	81.5	78	74.5	76.5	75	76.5	73.5
				60Hz	81.5	78	74.5	76.5	75	76.5	73.5
			High	50Hz	81.5	78	74.5	76.5	75	76.5	73.5
				60Hz	81.5	78	74.5	76.5	75	76.5	73.5
			Low	50Hz	83	81.5	79.5	78	76.5	77.5	77
				60Hz	83	81.5	79.5	78	76.5	77.5	77
	Enthalpy exchange Efficiency (%)	for heating	(Extra high)	50Hz	74.5	70	65	72	69.5	71	68.5
				60Hz	74.5	70	65	72	69.5	71	68.5
			High	50Hz	74.5	70	65	72	69.5	71	68.5
				60Hz	74.5	70	65	72	69.5	71	68.5
			Low	50Hz	76	74	71.5	73.5	71.5	71.5	71.5
				60Hz	76	74	71.5	73.5	71.5	71.5	71.5
		for cooling	(Extra high)	50Hz	69.5	65	60.5	64.5	61.5	64	60.5
				60Hz	69.5	65	60.5	64.5	61.5	64	60.5
			High	50Hz	69.5	65	60.5	64.5	61.5	64	60.5
				60Hz	69.5	65	60.5	64.5	61.5	64	60.5
			Low	50Hz	71	69	67	66.5	64	65.5	64.5
				60Hz	71	69	67	66.5	64	65.5	64.5

Item		Model No. / Fan Speed	VN-M150HE	VN-M250HE	VN-M350HE	VN-M500HE	VN-M650HE	VN-M800HE	VN-M1000HE
Construction	Frame		Zinc steel sheets						
	Motor		4-pole capacitor dielectric motor (E type)						
	Fan		PP resin						
	Heat exchanger		Special paper + Resin						
	Filter		Nonwoven fabric (Collection effect weighing method 82%)						
	Adapter		Zinc steel sheets						
	External dimensions (Length x Width x Height) (mm)		900 x 900 x 290			1140 x 1140 x 350		1189 x 1189 x 400	
	Product weight (kg)		36		38	53		70	
	Applicable duct nominal diameter (mm)		Ø100	Ø150		Ø200		Ø250	
Package	Shape		Corrugated board package						
	Dimensions (Length x Width x Height) (mm)		1394 x 362 x 932			1634 x 422 x 1172		1683 x 472 x 1221	
	Weight (kg)		42		45	61		79	
	No. of stacked boxes		3						
	Accessory		Adapter: 4, Screw: 16/24, Installation Manual: 1, Owner's Manual: 1						

* Sound Power Level is less than 70 dBA
* Sound pressure level of the product is the value which was measured at the acoustic room. Actually, in the established condition, that under go influence by the echoing of the room and so that become bigger than the display numerical value.
* The power consumption, the current and the exchange efficiency are values at the time of the mentioned air volume.
* Sound pressure level shall be measured 1.5m below the center of the unit.
* The temperature exchange efficiency averages that of when cooling and heating.

3 Model List

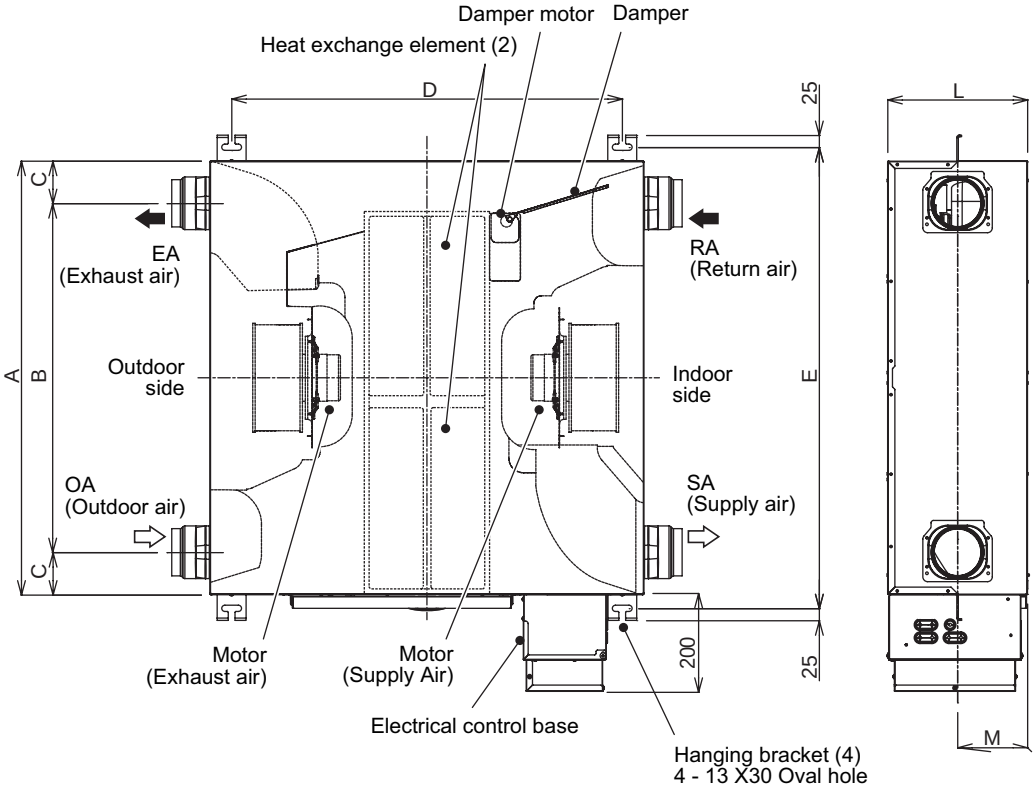

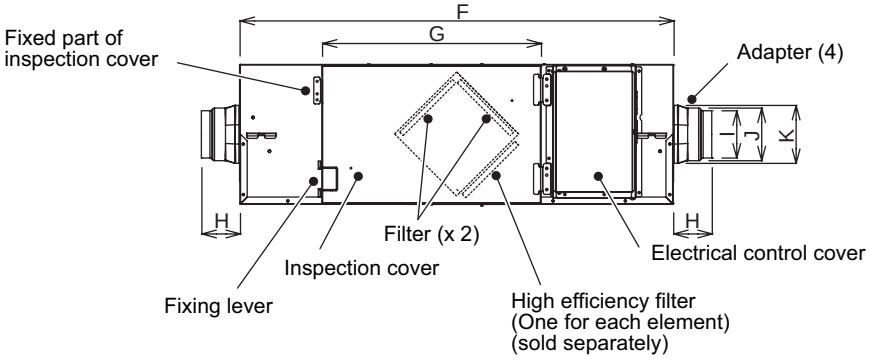

Unit: mm

Item	Count	Material	Remarks	Item	Count	Material	Remarks
Adapter	4	Galvanized steel sheet		Filter	4	Nonwoven fabric	Collecting efficiency (Mass Spectrometry): 82%
Electrical control cover	1			Damper	1		
Inspection cover	1	Galvanized steel sheet		Damper motor	1		
Motor (Exhaust air)	1			Hanging bracket	4	Galvanized steel sheet	
Motor (Supply air)	1			Electrical control base	1	Galvanized steel sheet	
Heat exchange element	2	Fire-resistant paper + Resin	Air to air heat exchanger	Fixing lever	1	SUS304	

Model name	A	B	C	D	E	F	G	H	I	J	K	L	M	Applicable duct nominal diameter
VN-M150HE	900	724	88	810	957	900	454	80	Ø98	Ø110	121	290	145	Ø100
VN-M250HE	900	670	115	810	957	900	454	97	Ø145	Ø158	162	290	145	Ø150
VN-M350HE	900	670	115	810	957	900	454	97	Ø145	Ø158	162	290	145	Ø150
VN-M500HE	1140	800	170	1050	1197	1140	454	80	Ø195	—	Ø212	350	175	Ø200
VN-M650HE	1140	800	170	1050	1197	1140	454	80	Ø195	—	Ø212	350	175	Ø200
VN-M800HE	1189	800	195	1099	1246	1189	454	85	Ø245	—	Ø262	400	200	Ø250
VN-M1000HE	1189	800	195	1099	1246	1189	454	85	Ø245	—	Ø262	400	200	Ø250

4 Connection diagram

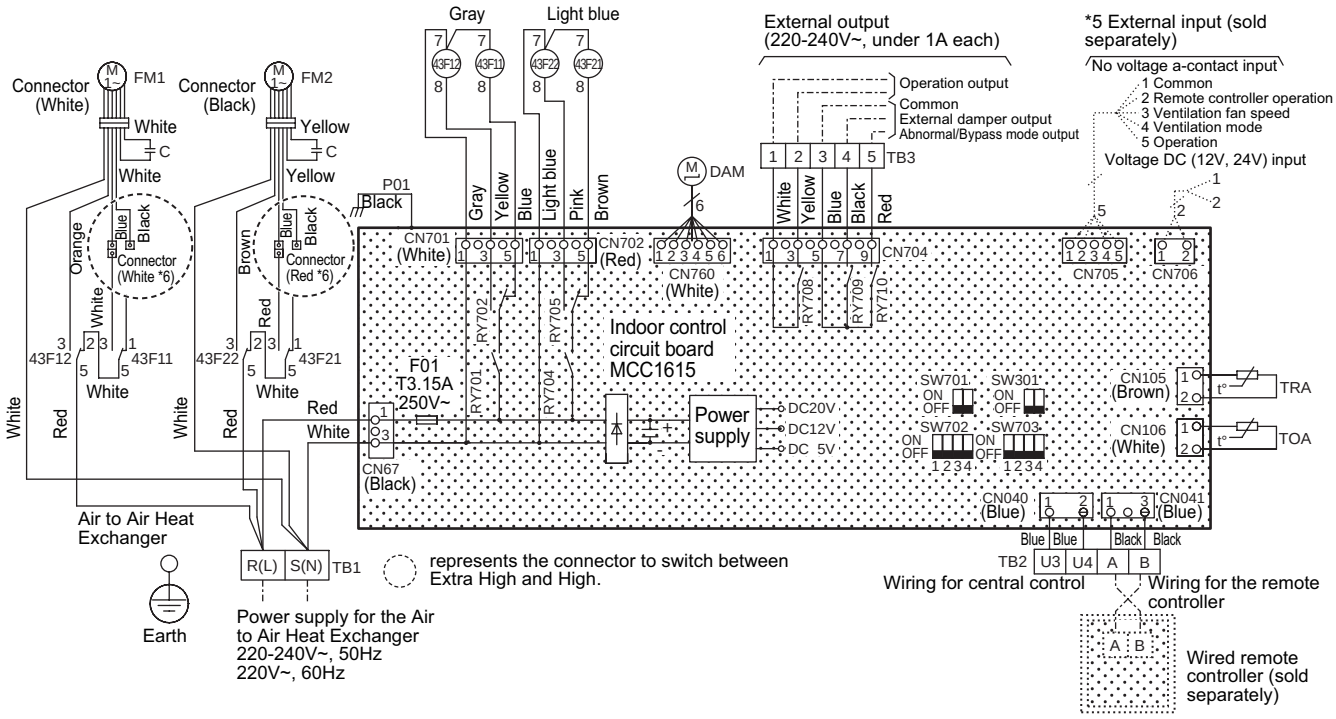

Code	Part name
CN***	Connector
F01	Fuse
FM1	Air supplying motor
FM2	Air exhausting motor
DAM	Damper motor
TRA	TRA sensor

Code	Part name
TOA	TOA sensor
RY701, RY702	Relay for air supplying motor
RY704, RY705	Relay for air exhausting motor
TB1	Terminal block (power supply)
TB2	Terminal block (communication)
TB3	Terminal block (external output)

Code	Part name
SW301, SW701 SW702, SW703	DIP switch
43F11, 43F12	Relay for air supplying motor
43F21, 43F22	Relay for air exhausting motor

1. The dotted line represents a wire procured locally, and the dashed line represents an option sold separately.
2. represents a terminal block, represents a connection terminal, and represents a connector on the printed circuit board.
3. represents a protective earth.
4. represents a printed circuit board.
5. Using a no voltage a-contact input of the external input (sold separately), the following operations are available:
   Between 1 and 2: Selecting the remote controller operation (Invalid/Valid)
   Between 1 and 3: Adjusting the ventilation fan speed (Low/High)
   Between 1 and 4: Selecting the ventilation mode (Bypass mode/Heat exchange mode)
   Between 1 and 5: Operation (ON/OFF)
   Use a microcurrent contact (DC12V, 1mA). In addition, ON/OFF operation is possible when using a voltage of DC12V or 24V.
6. Blue wire (High) is connected as factory default. To switch to “Extra High”, connect black wire’s connector instead of blue.
7. When the temperature of the outdoor air is below -10°C, the unit runs in the cold mode (the ventilator for air supply runs intermittently). The unit cannot run when the temperature of the outdoor air is below -15°C. The ventilator for air supply stops running and the ventilator for air exhaust also stops depending on the settings.
8. Even if “Bypass mode” is selected manually, the unit switches to “Heat exchange mode” automatically to prevent condensation when the temperature of the outdoor air is below 15°C. However, “Bypass mode” is still displayed.

5 Parts Rating

Model VN-M	150HE	250HE	350HE	500HE	650HE	800HE	1000HE
Running condenser for supply air fan motor	450V 1μF	450V 1μF	450V 3μF	450V 3μF	450V 3μF	450V 5μF	450V 10μF (5μF x 2)
Running condenser for exhaust air fan motor	450V 1μF	450V 1μF	450V 3μF	450V 3μF	450V 3μF	450V 5μF	450V 10μF (5μF x 2)
TOA sensor	Ø5 size lead wire length: 900mm vinyl tube (Blue)			Ø5 size lead wire length: 1040mm vinyl tube (Blue)			
TRA sensor	Ø5 size lead wire length: 1010mm non-migratory tube (Black)			Ø5 size lead wire length: 1270mm non-migratory tube (Black)			
Relay	LY-1F Rated voltage: AC220V/240V Rated load: 10A AC220V						
Damper motor	MP24ZN						

6 Control Outline

■ Air to Air Heat Exchanger

Control Specifications

NO.	Item	Specification outline	Remarks
1	When the power is reset	1. If the power supply is reset during the occurrence of an error, the check code is cleared. If an abnormal state continues even after the unit is restarted by pressing the [ON/OFF] button on the remote controller, the check code is redisplayed on the remote controller.	
2	Ventilation mode control	Air to Air Heat Exchanger system and Air to Air Heat Exchanger system linked with air conditioners 1) Ventilation mode control • The control method of the automatic mode is different depending on whether it is an Air to Air Heat Exchanger system or an Air to Air Heat Exchanger system linked with air conditioners. • There are three ventilation modes: Automatic, Heat Exchange, and Bypass. 2) When a system without a remote controller or RBC-AMT32E, RBC-AMS41E remote controller is used: • The ventilation mode can be changed with CODE No. (DN) [EA] of the DN setting. 3) Bypass mode control • If OA ≦ RA/10 + 12.5, the system automatically runs in Heat Exchange mode to prevent condensation. (For details, see the section “Cold Mode Control.”) • The display on the remote controller remains “Bypass” regardless of the ventilation mode in actual operation. • When operation starts in Bypass mode, the Heat Exchange mode is maintained for three minutes if the state before stop is Heat Exchange mode (cold mode control). 1. Air to Air Heat Exchanger system 1) Automatic mode control • One of the following three zones is selected by the TOA and TRA sensors: Cooling zone, Fan zone, Heating zone • Automatic ventilation control is performed in the Cooling and Heating zones. • For the Fan zone, the mode is fixed to Heat Exchange. • For five minutes after the start of Automatic mode, the Heat Exchange state is maintained. • The display on the remote controller remains “Automatic” regardless of the ventilation mode in actual operation. 2) Criteria for each zone: [Cooling zone] OA ≧ 24°C or OA ≧ 20°C and RA ≧ 24°C [Fan zone] 20°C ≦ OA < 24°C and 20°C ≦ RA < 24°C [Heating zone] Temperature range out of the Cooling and Fan zones 3) Bypass mode condition in automatic ventilation control [Cooling zone] RA ≧ 26°C and OA ≧ 22°C and RA ≧ OA + 3°C [Heating zone] RA ≦18°C and RA/10°C + 14.5°C ≦ OA ≦ 22°C and OA ≧ RA + 3°C • If the system is in an undefined zone when operation starts, the system is operated in Heat exchange mode. If the state moves to this zone during operation, the previous state is retained.	TOA sensor TRA sensor CODE No. (DN) [EA] [EC]

NO.	Item	Specification outline	Remarks
2	Ventilation mode control (continued)	**Automatic ventilation mode control in the Air to Air Heat Exchanger system** 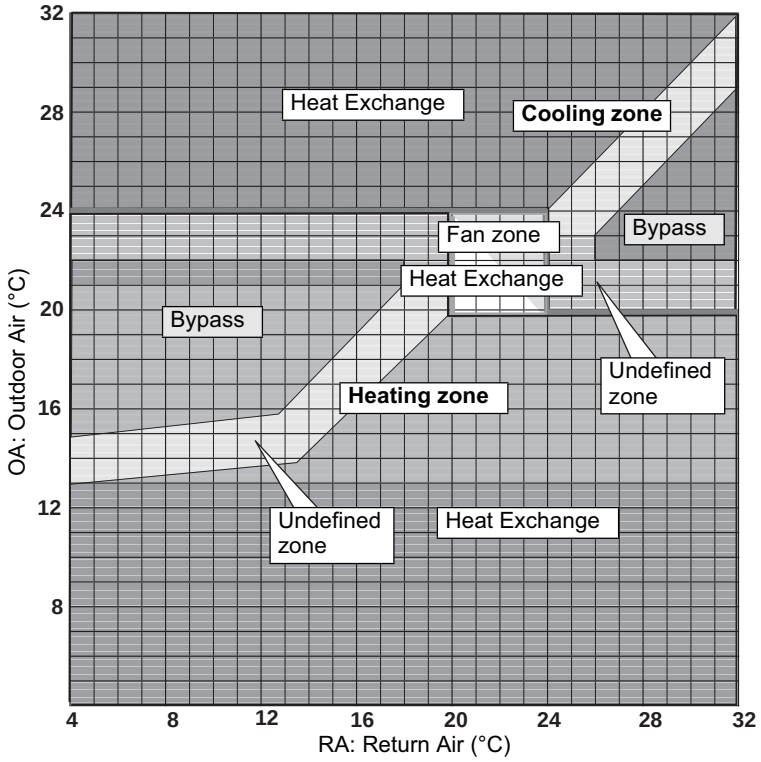 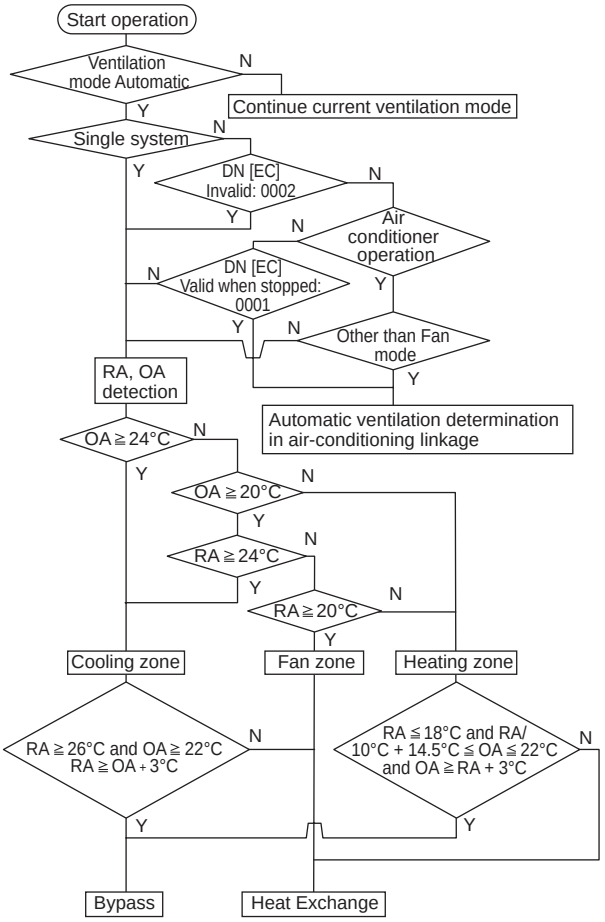 	

NO.	Item	Specification outline	Remarks
2	Ventilation mode control (continued)	2. Air to Air Heat Exchanger system linked with air conditioners 1) Automatic ventilation mode control in the air-conditioning linkage • Determine the mode from the operation mode of the air conditioner. [Cooling zone]: The air conditioner operation mode is Automatic cooling, Cooling, or Drying mode. [Heating zone]: The air conditioner operation mode is Automatic heating or Heating mode. In Fan mode, the zone is determined by the automatic ventilation mode control in the Air to Air Heat Exchanger system. • The setting of the automatic ventilation control in the Air to Air Heat Exchanger system linked with air conditioners can be changed with CODE No. (DN) [EC] of the DN setting. 0000: Valid only when the air conditioner is running (factory default). When the air conditioner is stopped, the zone is determined by the automatic ventilation mode control of the Air to Air Heat Exchanger system. 0001: Valid even if the air conditioner is stopped. If the air conditioner is stopped, the zone is determined by the operation mode and set temperature before stop. 0002: Invalid. The zone is determined by the automatic ventilation mode control in the Air to Air Heat Exchanger system. 2) The Bypass condition at the time of automatic ventilation mode control in the Air to Air Heat Exchanger system linked with air conditioners (excluding Fan mode) [Cooling zone] RA ≧ OA + 3°C and RA ≧ set temperature + 2°C and OA ≧ RA/10°C + 14.5°C and RA ≧ 20°C [Heating zone] OA ≧ RA + 3°C and RA ≦ set temperature - 2°C and OA ≧ RA/10°C + 14.5°C and RA ≦ 27°C • Condition for returning to Heat Exchange (determined by the set temperature before stop, even when the air conditioner is stopped) (For details, see the section “Cold Mode Control.”) [Cooling zone] RA ≦ set temperature - 2°C or RA ≦ 18°C [Heating zone] RA ≧ set temperature + 2°C or RA ≧ 29°C • If the system is in an undefined zone when operation starts, the system is operated in Heat exchange mode. If the state moves to this zone during operation, the previous state is retained. **Automatic ventilation mode control in the Air to Air Heat Exchanger system linked with air conditioners** 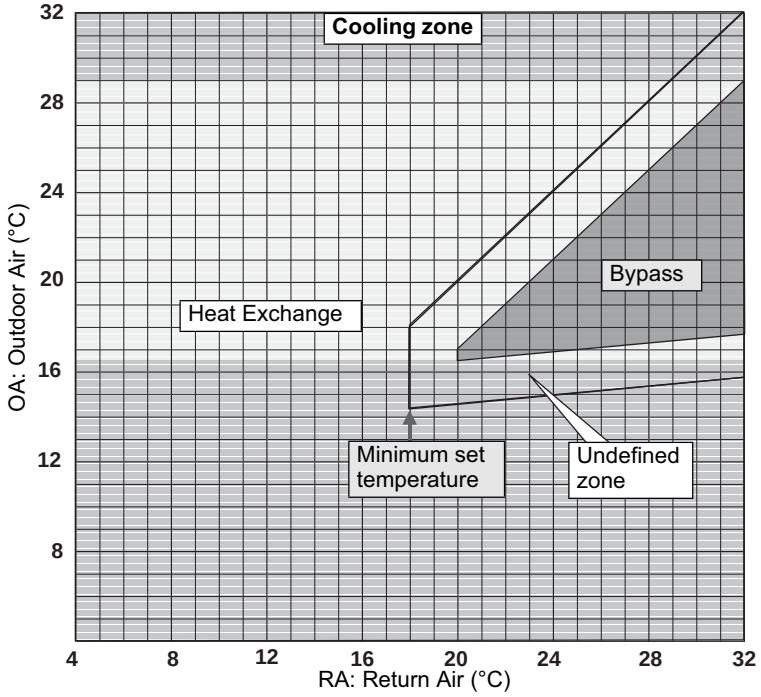 	

NO.	Item	Specification outline	Remarks
2	Ventilation mode control (continued)	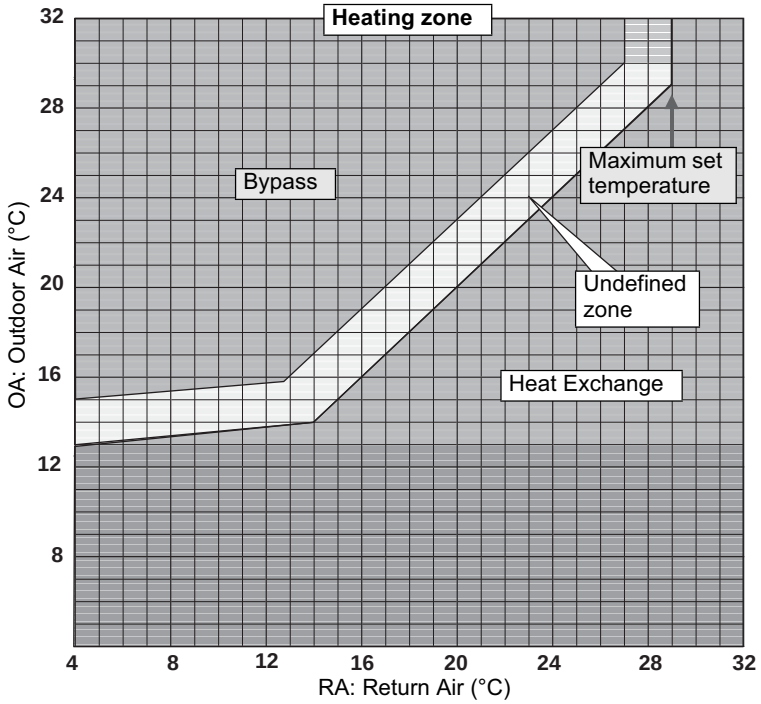 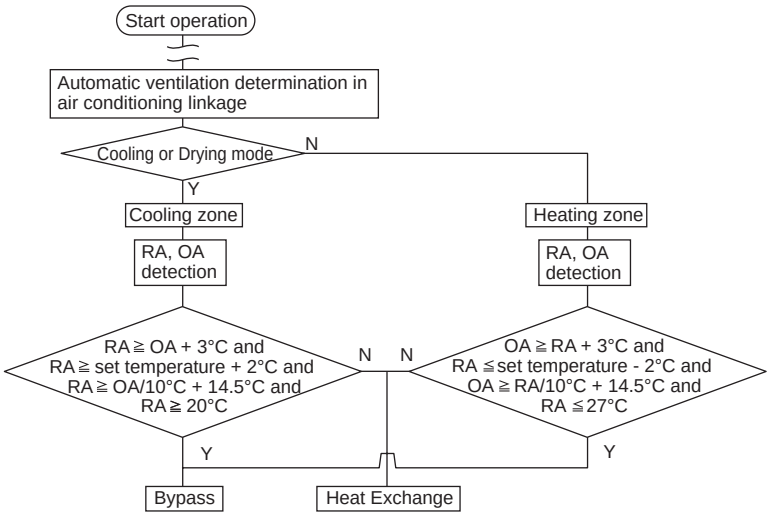	
3	Ventilation fan speed control	1. By pressing the [VENT FAN] button, Ventilation Fan Speed High/Low and SA > EA/SA < EA can be switched. • SA > EA and SA < EA can be changed with CODE No. (DN) [48] of the DN setting. 0000: Normal (factory default) 0001: SA (High) > EA (Low) active 0002: SA (Low) < EA (High) active * “High” may be “Extra High.” 2. When a system without a remote controller or RBC-AMT32E, RBC-AMS41E remote controller is used: • The ventilation mode can be changed with CODE No. (DN) [EB] of the DN setting.	CODE No. (DN) [EB][48]

NO.	Item	Specification outline	Remarks
4	24-hour ventilation control	1. 24-hour ventilation operation and setting • By operating the [ON/OFF] and [VENT] buttons during operation of Air to Air Heat Exchangers, they stop operation and the system moves to 24-hour ventilation (low): 60 minutes ON, 60 minutes OFF. The ventilation mode is fixed to Heat Exchange. * The setting of 24-hour ventilation (Valid/Invalid) needs to be changed with CODE No. [49] of the DN setting. 0000: Invalid (factory default); 0001: Valid 2. Setting the on/off ratio of 24-hour ventilation • The on/off ratio complaint response mode can be changed with CODE No. (DN) [4A] of the DN setting. 0000: Normal; the air volume of ventilation: 1/2, fan is ON for 60 minutes and OFF for 60 minutes (factory default). 0001–0059: the air volume of ventilation: Fan is ON for [SET DATA of DN] minutes and OFF for [60-SET DATA of DN] minutes. 3. Changing the ventilation fan speed of 24-hour ventilation • The setting of the ventilation fan speed of the 24-hour ventilation can be changed with CODE No. (DN) [47] of the DN setting. 0000: Operate with ventilation fan speed fixed to Low (factory default) 0001: Operate with the ventilation fan speed that was set before stop. 4. In the Air to Air Heat Exchanger system, Air to Air Heat Exchangers stop if the [ON/OFF] button is pressed when they are running, and the system enters 24-hour ventilation mode. 5. In the Air to Air Heat Exchanger system linked with air conditioners, Air to Air Heat Exchangers and air conditioners stop if the [ON/OFF] button is pressed when they are running, and the system enters 24-hour ventilation mode. 6. In the Air to Air Heat Exchanger system linked with air conditioners, Air to Air Heat Exchangers stop if the [VENT] button is pressed when only the Air to Air Heat Exchangers are running or when both the Air to Air Heat Exchangers and air conditioners are running, and the system enters 24-hour ventilation mode. * The setting of the single operation of the Air to Air Heat Exchanger needs to be changed with CODE No. (DN) [31] of the DN setting. (Setting for the header air conditioner) 0000: Invalid (factory default); 0001: Valid 7. Operation during 24-hour ventilation • During 24-hour ventilation, the ventilation fan speed and the ventilation mode cannot be changed, and they are not displayed. 8. Stop of 24-hour ventilation • From the NRC-01HE, 24-hour ventilation can be stopped temporarily by holding the [VENT FAN] button down for four seconds when 24-hour ventilation is in operation. • The "24H" display goes out.	CODE No. (DN) [47][31][49][4A] • "24H" lights up
5	Delayed operation control	1. The delay setting needs to be changed with CODE No. (DN) [4B] of the DN setting in the Air to Air Heat Exchanger system linked with air conditioners. After pressing the [ON/OFF] button, operation of the Air to Air Heat Exchanger is delayed by [SET DATA of DN] × 10 minutes. 0000: No delay (factory default) 0001–0006: Delay by [SET DATA of DN] × 10 minutes * The delay time can be set between 10 and 60 minutes in the unit of 10 minutes. * If the [VENT] button is pressed during single operation of Air to Air Heat Exchangers, delayed operation is not performed. 2. During delayed operation, "⏲" lights up.	CODE No. (DN) [4B] • "⏲" lights up.

NO.	Item	Specification outline	Remarks
6	Nighttime heat purge control	This function is valid only for the Air to Air Heat Exchanger system linked with air conditioners (invalid for the Air to Air Heat Exchanger system). 1. If the [ON/OFF] button is pressed during operation, the Air to Air Heat Exchangers and the air conditioners stop, and the system enters the nighttime heat purge mode (standby mode). * The setting of nighttime heat purge (Valid/Invalid) needs to be changed with CODE No. (DN) [4C] of the DN setting. 0000: Invalid (factory default) 0001–0048: Temperature monitoring operation starts after [SET DATA of DN] × 1 hour. 2. Conditions that make the nighttime heat purge setting valid • Only when the air conditioners and Air to Air Heat Exchangers are stopped • Only when the operation mode before the stop of the air conditioner header unit is Automatic cooling, Drying, or Cooling • When 24-hour ventilation is set to Invalid • Invalid when only the Air to Air Heat Exchangers are stopped • Invalid when the air conditioners are stopped in states where only the Air to Air Heat Exchangers are stopped 3. When the nighttime heat purge setting is valid • The mode moves from the stop of the Air to Air Heat Exchangers to the nighttime heat purge operation mode (standby mode). " ☽ " lights up, and the system enters the nighttime heat purge operation standby mode. 4. Nighttime heat purge operating conditions: • The nighttime heat purge monitoring operation start time specified in the DN setting (1 to 48 hours) has passed. • Temperature monitoring operation is performed for five minutes (Heat Exchange mode) and nighttime heat purge operation starts if the following conditions are met. • RA ≧ 0A + 3°C and RA ≧ set temperature + 2°C and OA ≧ RA/10°C + 14.5°C 5. During nighttime heat purge operation • The ventilation fan speed can be changed with CODE No. (DN) [47] of the DN setting. 0000: Operate with the ventilation fan speed fixed to Low (factory default) 0001: Operate with the ventilation fan speed that was set before stop • During nighttime heat purge operation, the ventilation mode (fixed to Bypass mode) cannot be changed, and it is not displayed. 6. Nighttime heat purge temporary stop condition (one-hour stop) • RA ≦ OA or RA ≦ set temperature or OA ≦ RA/10°C + 12.5°C or one hour has passed since the start of nighttime heat purge 7. Nighttime heat purge stop (termination) conditions • The air conditioners or Air to Air Heat Exchangers start operation. • When single operation of the fan is performed while " ☽ " is lit, nighttime heat purge stops. When single operation of the Air to Air Heat Exchanger is stopped, the mode does not return to "Nighttime heat purge." • 48 hours have passed since the start of nighttime heat purge operation (start of temperature monitoring operation). 8. When nighttime heat purge operation stops: • The " ☽ " display goes out.	CODE No. (DN) [4C][47] • " ☽ " lights up.

NO.	Item	Specification outline	Remarks
6	Nighttime heat purge control (continued)	**Nighttime heat purge control** 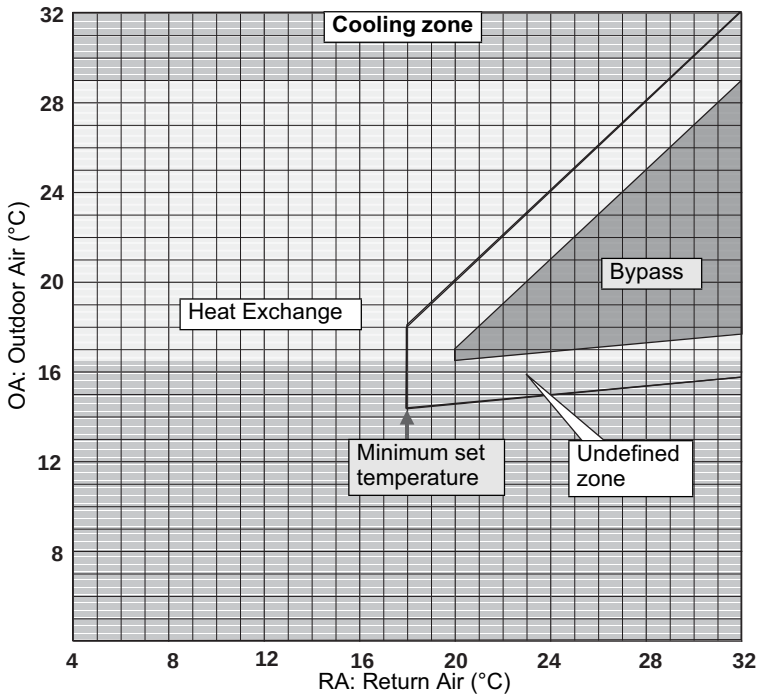 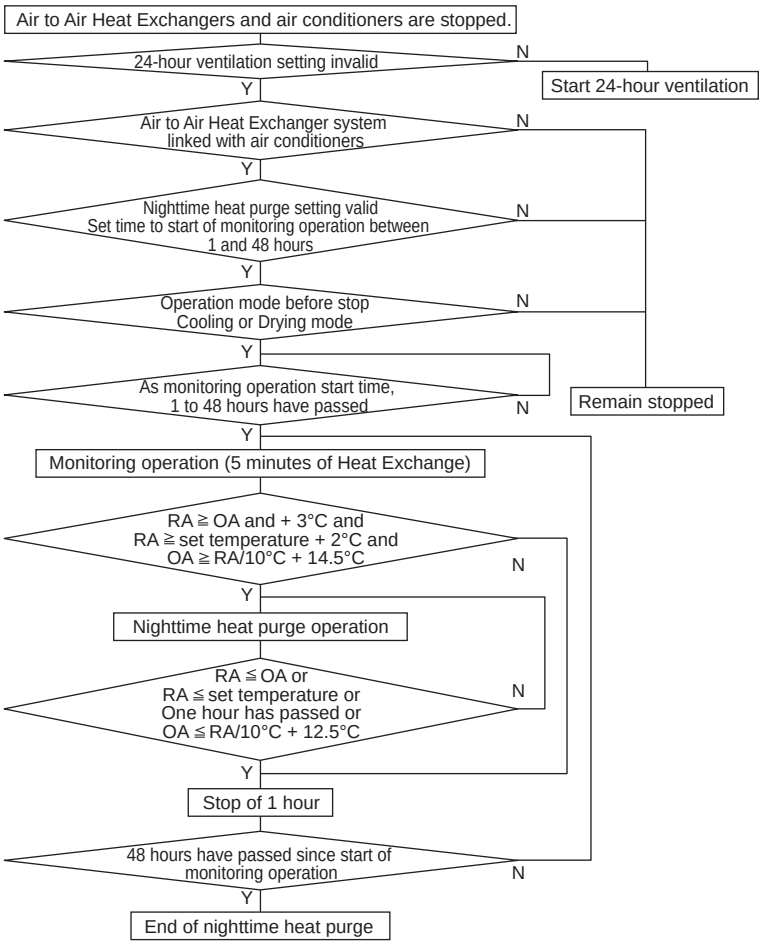 	

NO.	Item	Specification outline	Remarks
7	Cold mode control	1. Even in Bypass mode control, the system automatically enters Heat Exchange mode to prevent condensation if OA ≦ RA/10°C + 12.5°C. • The display on the remote controller remains “Bypass mode” regardless of the ventilation mode in actual operation. • When operation starts in Bypass mode, the system runs in Heat Exchange mode for three minutes if the state before stop is Heat Exchange mode (cold mode control). 2. The ON time in each zone is maintained for at least three minutes. When the temperature condition moves to another zone, the system starts the OFF condition in another zone. 3. In the B zone condition, the supplying fan performs intermittent operation (stops for 10 minutes and runs for 60 minutes). The exhausting fan runs continuously. 4. In the C zone condition, the supplying fan stops. However, it stops for 60 minutes and runs for five minutes. The setting of the exhausting fan can be changed with CODE No. (DN) [4D] of the DN setting. 0000: Exhausting fan runs (factory default) 0001: Exhausting fan stops	CODE No. (DN) [4D]

Zone	Zone criterion
Bypass mode permitted zone ⇒ Zone A	OA ≦ RA/10°C + 12.5°C
Zone A ⇒ Zone B	OA ≦ – 10°C or OA ≦ RA – 36°C
Zone B ⇒ Zone C	OA ≦ – 15°C or OA ≦ RA – 41°C
Zone C ⇒ Zone B	OA ≧ – 13°C or OA ≧ RA – 39°C
Zone B ⇒ Zone A	OA ≧ – 8°C or OA ≧ RA – 34°C
Zone A ⇒ Bypass mode permitted zone	OA ≧ RA/10°C + 14.5°C

Cold mode control

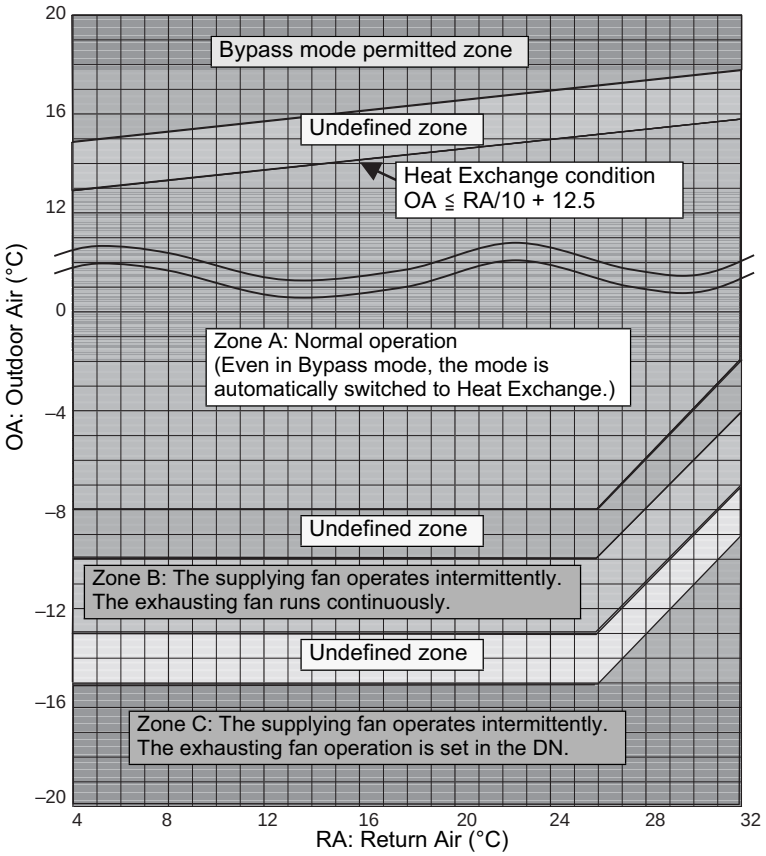

NO.	Item	Specification outline	Remarks
7	Cold mode control (continued)	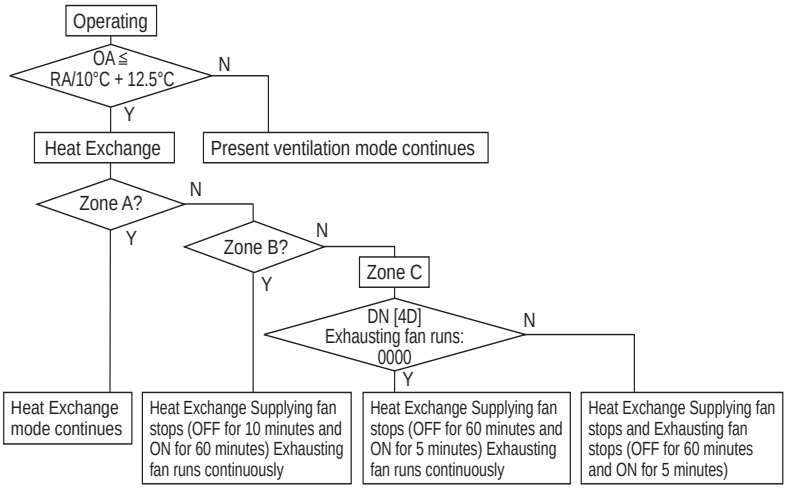	
8	Filter symbol display	1. The indoor header unit's cumulative hours of operation are counted, and when they exceed the prescribed value, a filter replacement signal is sent to the remote controller to display a filter symbol on the remote controller. • The setting of the prescribed number of hours can be changed with CODE No. (DN) [01] of the DN setting. 0000: None 0001: 150 hours 0002: 2,500 hours (factory default) 0003: 5,000 hours 0004: 10,000 hours 2. When a filter reset signal is received from the remote controller, the timer measuring cumulative hours is cleared. If the prescribed number of hours has been exceeded, the measurement time is reset with the symbol on the remote controller display erased. 1) In the Air to Air Heat Exchanger system linked with air conditioners, the cumulative time of operation of the indoor header unit is the representative of the group. * In the Air to Air Heat Exchanger system linked with air conditioners, the cumulative time of 24-hour ventilation operation is not counted. * In the Air to Air Heat Exchanger system linked with air conditioners, the cumulative time of the nighttime heat purge operation is not counted. 2) In the Air to Air Heat Exchanger system, the cumulative operating time of the exhausting fan of the Air to Air Heat Exchanger header unit is the representative of the group. * In the Air to Air Heat Exchanger system, the cumulative operating time of 24-hour ventilation is counted. 3) When the degree of dirt of the filter is set, its time is half the standard time. • The setting of the degree of dirt of the filter can be changed with CODE No. (DN) [02] of the DN setting. 0000: Standard (factory default) 0001: High degree of dirt (half the standard time)	CODE No. (DN) [01][02] • " ▦ " lights up

<table>
<tr><th>NO.</th><th>Item</th><th>Specification outline</th><th>Remarks</th></tr>
<tr><td>9</td><td>Selection of central control mode</td><td>1. The range of operations that can be performed by operating the remote controller of the Air to Air Heat Exchanger can be determined through the setting of the central controller.
2. Setting details
• TCC Link central control
<table>
<tr><th rowspan="2">Operation from TCC Link central control</th><th colspan="5">Operation on NRC-01HE</th><th rowspan="2">NRC-01HE display</th></tr>
<tr><th>Setting start/stop</th><th>Setting ventilation start/stop</th><th>Setting timer</th><th>Setting ventilation fan speed</th><th>Setting ventilation mode</th></tr>
<tr><td>Individual</td><td>O</td><td>O</td><td>O</td><td>O</td><td>O</td><td rowspan="5">“ ” is displayed</td></tr>
<tr><td>[Central 1]</td><td>×</td><td>O</td><td>×</td><td>O</td><td>O</td></tr>
<tr><td>[Central 2]</td><td>×</td><td>O</td><td>×</td><td>O</td><td>O</td></tr>
<tr><td>[Central 3]</td><td>O</td><td>O</td><td>O</td><td>O</td><td>O</td></tr>
<tr><td>[Central 4]</td><td>O</td><td>O</td><td>O</td><td>O</td><td>O</td></tr>
</table>
(O: Accessible ×: Inaccessible)
* The ventilation start/stop operation applies only to operation linked with air conditioners. It becomes effective when “single operation of the fan” is set to 0001 (valid) in CODE No. (DN) [31].</td><td>• “ ” lights up while in central control mode.
• The display blinks when a control function inaccessible to a remote controller is chosen.</td></tr>
<tr><td>10</td><td>Operation output (Connecting an auxiliary fan)</td><td>1. Operation output setting
• The output setting can be changed by CODE No. (DN) [ED]
0000: Contact is on only during normal operation.
* Contact is off during 24-hour ventilation or nighttime heat purge operation.
* Contact is off during cold mode (while the temperature is below -10 °C).
0001: Contact is on during normal operation, 24-hour ventilation, or nighttime heat purge operation.
* Contact is on when 24-hour ventilation is stopped intermittently.
* Contact is off when nighttime heat purge operation is on standby. (paused before the monitoring operation of the nighttime heat purge operation starts)
* Contact is off during cold mode (while the temperature is below -10 °C).
0002: Contact is on during 24-hour ventilation or nighttime heat purge operation.
* Contact is on when 24-hour ventilation is stopped intermittently.
* Contact is off during normal operation or when the nighttime heat purge operation is on standby. (paused before the monitoring operation of the nighttime heat purge operation starts)
* Contact is off during cold mode (while the temperature is below -10 °C).
0003: Contact is on only when SA fan (Supplying fan) is running.
* Contact is off when 24-hour ventilation is stopped intermittently, so do not connect an auxiliary fan.
0004: Contact is on only when EA fan (Exhausting fan) is running.
* Contact is off when 24-hour ventilation is stopped intermittently, so do not connect an auxiliary fan.</td><td>CODE No. (DN) [ED]
• External output terminal block ((1) – (2))</td></tr>
<tr><td>11</td><td>Electric damper output</td><td>1. Output setting for electric damper
• The setting can be switched between Normal and Complaint Response Setting in the DN setting.
• The output setting can be changed with CODE No. (DN) [5C] of the DN setting.
0000: Normal (factory default)
0001: 24-hour ventilation, nighttime heat purge operation supported
2. Operation ON/OFF condition in normal setting
• ON during intermittent stop in 24-hour ventilation mode
• ON in cold mode control (Zones B and C)
• ON if the fan is stopped when switching the damper (Heat exchange mode/ Bypass mode)
• ON from the start of monitoring operation of nighttime heat purge to the end of nighttime heat purge
• OFF during delayed operation
• OFF during the stop of normal operation (including 24-hour stop)
3. Operation output ON/OFF condition when support of 24-hour ventilation and nighttime heat purge operation is set
The settings are the same as those for normal settings except the following:
• OFF during intermittent stop in 24-hour ventilation mode
• OFF during temporary stop in nighttime heat purge mode</td><td>CODE No. (DN) [5C]
• External output terminal block ((3) – (4))</td></tr>
</table>

NO.	Item	Specification outline	Remarks
12	Linked operation with external devices	Connect the Remote ON/OFF adapter (NRB-1HE: sold separately) to the connectors CN706(2P) and CN705(5P) on the control circuit board of the Air to Air Heat Exchanger. 1. Output signals of external devices • DC12V, DC24V: Connect to CN706(2P) • No voltage a-contact: Connect to CN705(5P) and use (1) Green – (5) Black 2. Pulse/Static switch of output signals of external devices (Static: OFF by default) • No. 1 of the switch SW701 on the board (Pulse: ON) 3. Linked operation with external devices • You can set the Air to Air Heat Exchanger operations for ON/OFF signals of external devices by CODE No. (DN) [4E]. 0000: The Air to Air Heat Exchanger starts/stops together with the starting/stopping of an external device. (The latter operation of the remote controller or the switch of the external device overrides the former.) 0001: The Air to Air Heat Exchanger starts together with the starting of an external device. Use the remote controller to stop operation. 0002: The Air to Air Heat Exchanger stops together with the stopping of an external device. Use the remote controller to start operation. Operation signals DN [4E] 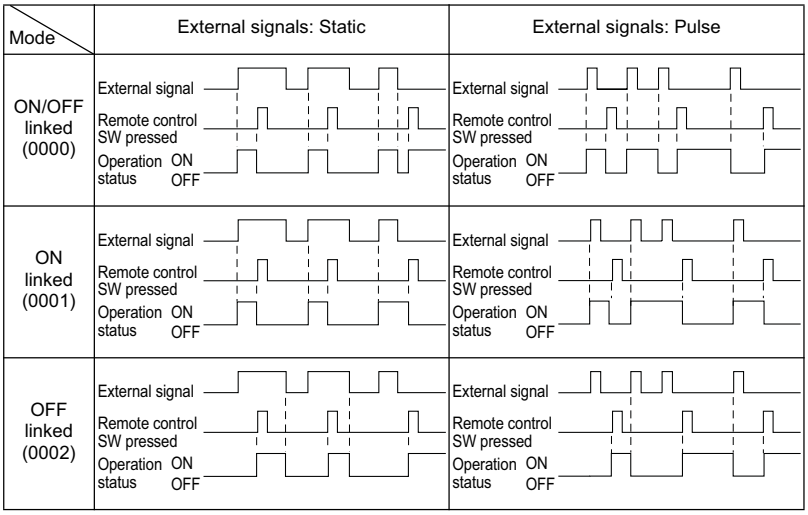 	CODE No. (DN) [4E] • Remote ON/OFF adapter (NRB-1HE: sold separately) • No. 1 of the switch SW701 on the board Pulse: ON Static: OFF (Factory setting)

7 Applied Control and Functions (Including Circuit Configuration)

7-1. Heat Exchanger Controller Block Diagram

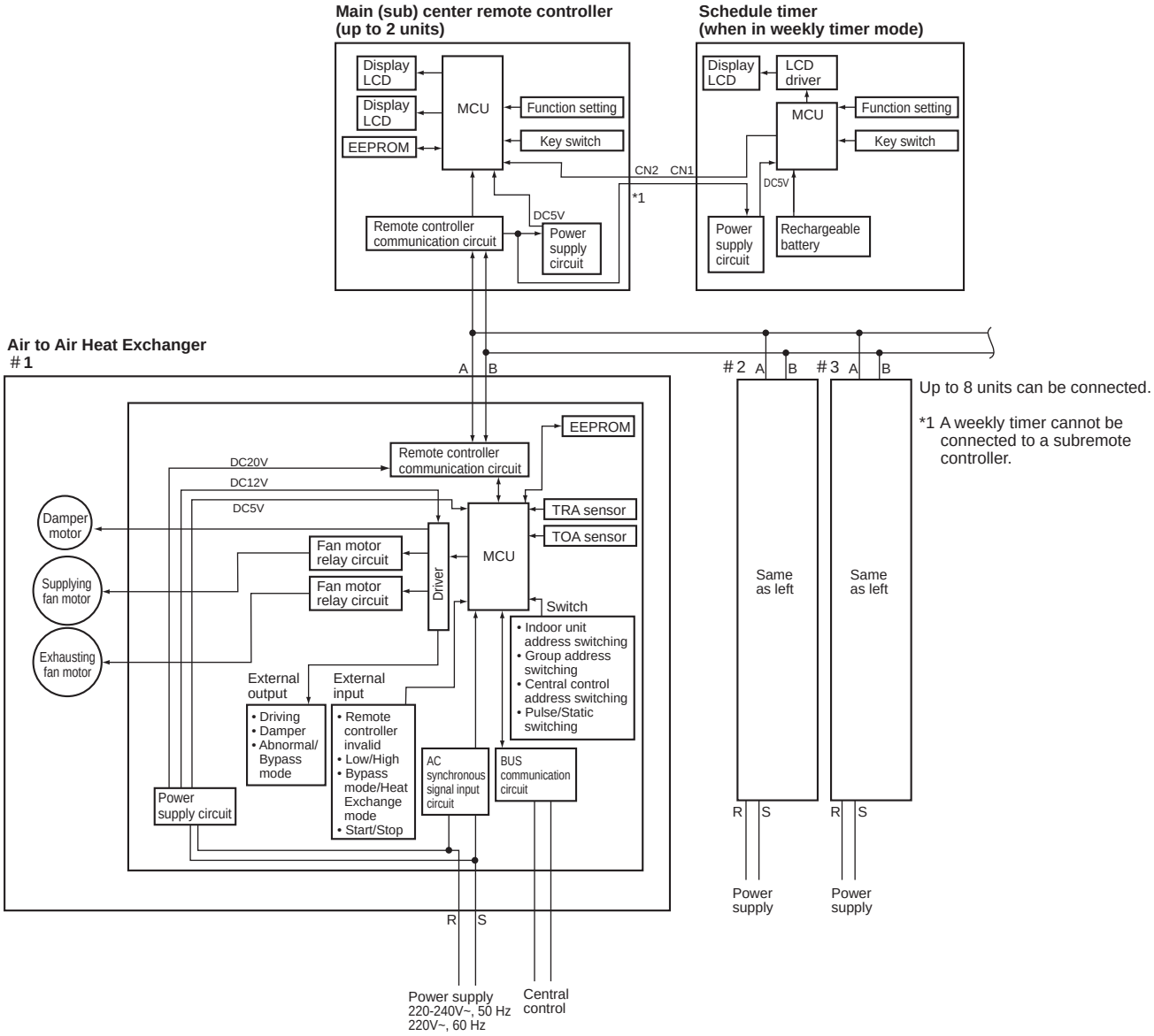

7-2. Indoor Printed Circuit Board

MCC-1615

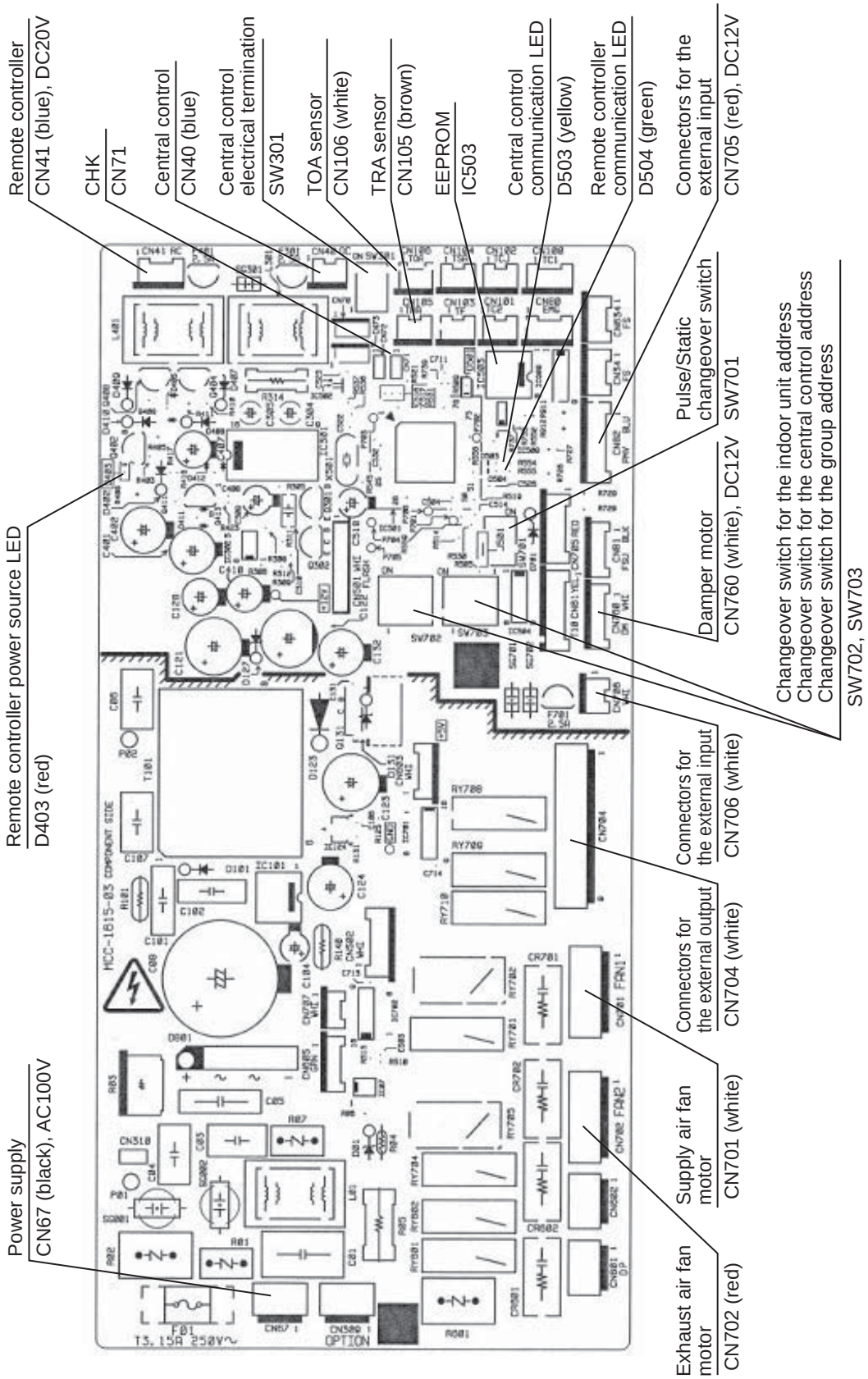

7-3. Functions at Test Operation

◆Checking ventilation mode test operation

Starting and stopping test operation

▼Performing test operation from the indoor remote controller
Wired remote controller

Procedure	Operation
1	When the TEST button is pushed for 4 seconds or more, “TEST” is displayed in the display section, and the unit enters test operating mode. 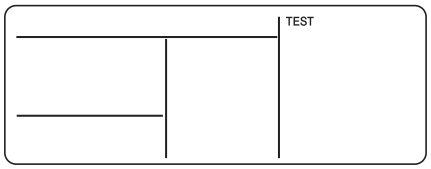
2	Press the ON / OFF button.
3	By using the VENT MODE button, select or . Errors are detected as usual. 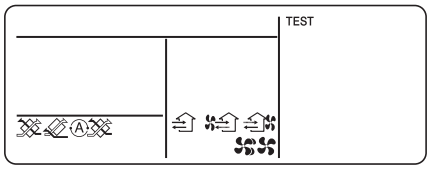
4	When the test operation is finished, push the ON / OFF button to stop the operation. (The same display as in procedure 1 appears in the display.)
5	Push the TEST button to clear the test operating mode. (“TEST” disappears from the display section, and the status returns to normal stopped status.) 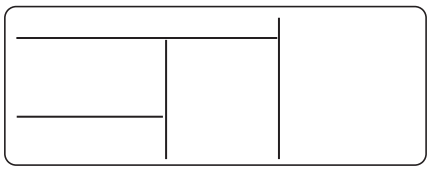

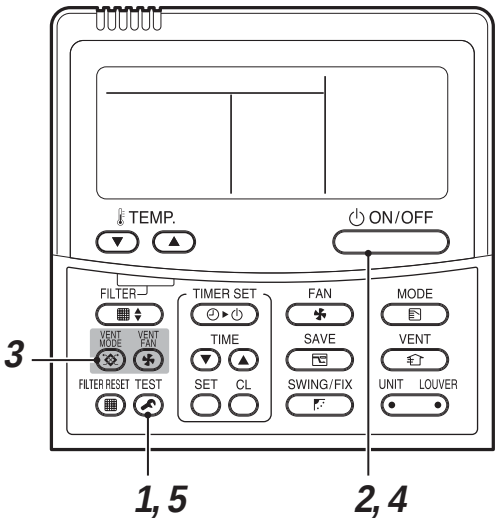

NOTE

Test operation will return to normal operation after a lapse of 60 minutes.
During test operation, the cold mode control and delayed operation are disabled.
Bypass mode ventilation

- In Bypass mode, Bypass operation is performed regardless of the RA and OA sensor temperatures.

Automatic mode ventilation

- In the Air to Air Heat Exchanger system, the ventilation mode is fixed to Heat Exchange.
- If the operation mode is Cooling or Heating in the Air to Air Heat Exchanger system linked with air conditioners, the ventilation mode is fixed to Heat Exchange.
- If the operation mode is Fan in the Air to Air Heat Exchanger system linked with air conditioners, the ventilation mode is fixed to Bypass.

◆Check function for operation of Air to Air Heat Exchanger

This function is provided to check the operation of Air to Air Heat Exchanger singly without communication with the remote controller. This function can be used regardless of operation or stop of the system.
However, if using this function for a long time, a trouble of the equipment may be caused. Limit using this function within several minutes.

[How to operate]
Short-circuit CHK pin (CN71 on the P.C. board).

[How to clear]
Open CHK pin. While the system is operating, it stops once but automatically returns to operation after several minutes.

	Short-circuit of CHK pin
Fan motor	(H)
Ventilation mode	Heat exchange mode
Operation output, Electric damper output	OFF
Communication	All ignored
P.C. board LED	Lights

- For the detailed positions of CHK pin (CN71 on P.C. board), refer to the P.C. board MCC-1615.

7-4. Specifications of Optional Connectors on the Air to Air Heat Exchanger Unit Board

Function	Connector No.	Pin No.	Specification	Note
External input No-voltage contact a	CN705	1	0V (COM)	
		2	Remote controller prohibition input	Remote controller prohibition input (ON: Prohibited, OFF: Allowed)
		3	Ventilation fan speed change input	Ventilation fan speed change input (ON: LOW, OFF: HIGH)
		4	Ventilation mode change input	Ventilation mode change input (ON: Bypass, OFF: Heat Exchange)
		5	Start/Stop input	Start/Stop input (pulse/static input changed by No. 1 of DIP SW701, OFF: Static (default), ON: Pulse)
External input DC12V, 24V	CN706	1	DC12V (COM)	
		2	Start/Stop input	Start/Stop input (pulse/static input changed by No. 1 of DIP SW701, OFF: Static (default), ON: Pulse)

7-5. Configuring the Function Settings of the Air to Air Heat Exchanger Unit

(When configuring the settings, use the wired remote controller.)

<Procedure> Stop running the unit before configuring the settings.

1 **Press and hold the TEST + SET + CL buttons for 4 seconds or longer.**

The Unit No. displayed first indicates the indoor unit address of the header unit in group control.

The Air to Air Heat Exchanger Unit No. is 31-OO.

The fan of the selected Air to Air Heat Exchanger starts running.

The indicator lights up when the wired remote controller NRC-01HE is used.

- The line (system) address is always 31.
- The indoor unit address is between 1 and 64. The address is specified with No.1 to No.4 of SW702 and with No.1 and No.2 of SW703.

2 **Each time you press UNIT LOUVER (left side of the button), the unit No. of the Air to Air Heat Exchangers in the group are displayed successively. Only the fan of the selected Air to Air Heat Exchanger starts running.**

3 **Press the temperature TEMP. button to select the CODE No. (DN).**

4 **Press the timer TIME button to select the setting data.**

5 **Press the SET button. (There are no problems if the indicator lights up.)**

- To change the selected Air to Air Heat Exchanger, return to ***2***.
- To change CODE No. (DN) to set, return to ***3***.

6 **Press the TEST button to return to normal operation. (The unit stops.)**

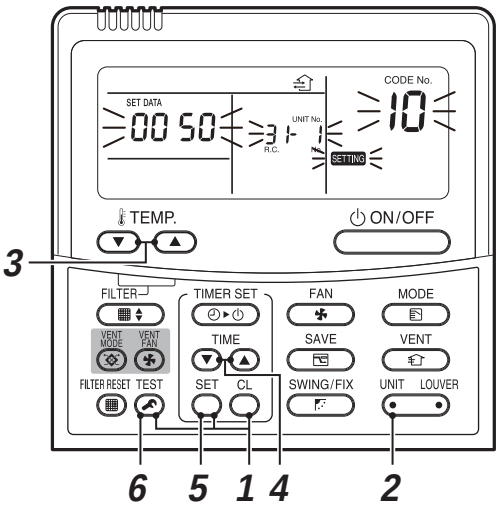

Procedure

1 → ***2*** → ***3*** → ***4*** → ***5*** → ***6*** End

Codes (DN codes) for changing settings (Necessary for local advanced control)

The following DN codes are used in common for NRC-01HE, RBC-AMT32E, and RBC-AMS41E.

Code	Description	SET DATA and description	Factory default	Note
01	Lighting-up hours of the Filter Sign	0000: None 0001: 150 H 0002: 2500 H 0003: 5000 H 0004: 10000 H	0002: 2500 H	Adjusting this setting is necessary for the header unit.
02	Dirty state of filter	0000: Standard 0001: High degree of dirt (Half of standard time)	0000: Standard	Adjusting this setting is necessary for the header unit.
03	Central control address	0001-0064: Central address 0099: Unfixed	0099: Unfixed	Adjusting this setting is necessary for the header unit.
10	Type code	0050: Air to Air Heat Exchanger (Ceiling - embedded duct)	0050: Air to Air Heat Exchanger (Ceiling - embedded duct)	Adjusting this setting is necessary for all the Air to Air Heat Exchangers in the group.
11	Capacity code	0000: Unfixed 0001-0007:	Depends on the capacity	Adjusting this setting is necessary for all the Air to Air Heat Exchangers in the group.
14	Group address	0099: Unfixed 0000: Individual 0001: Header unit 0002: Follower unit	0099: Unfixed	Does not need to be configured as it is set in No. 4 of DIPSW703. Can be changed in the DN setting when No. 4 is OFF.
28	Auto recovery from a power failure	0000: Invalid 0001: Valid * Resumes the status just before the power failure	0000: Invalid	*1
31	Single operation of the fan	0000: Invalid 0001: Valid * ON/OFF operation for the Air to Air Heat Exchanger only	0000: Invalid	Adjusting this setting is necessary for the header unit. (System equipped with the Air to Air Heat Exchanger and air conditioners)
47	24-hour nighttime heat purge Fan speed ventilation setting	0000: Always LOW 0001: Fan speed ventilation before the operation is stopped * 24-hour nighttime heat purge Fan speed ventilation setting	0000: Always LOW	Adjusting this setting is necessary for all the Air to Air Heat Exchangers in the group.
48	Imbalanced Fan speed ventilation	0000: Normal 0001: SA (High) > EA (Low) active 0002: SA (Low) < EA (High) active * “High” may be “Extra High”.	0000: Normal	Adjusting this setting is necessary for all the Air to Air Heat Exchangers in the group.
49	24-hour ventilation	0000: Invalid 0001: Valid	0000: Invalid	Adjusting this setting is necessary for all the Air to Air Heat Exchangers in the group.
4A	ON/OFF ratio of 24-hour ventilation	0000: Normal (The air volume of ventilation 1/2: 60-minute ON, 60-minute OFF) 0001-0059: Arbitrary ([SET DATA of DN] minute ON, [60-SET DATA of DN] minute OFF)	0000: Normal	Adjusting this setting is necessary for all the Air to Air Heat Exchangers in the group.
4B	Delayed operation	0000: Invalid 0001-0006: [SET DATA of DN] x 10 minutes delay * Delaying the Air to Air Heat Exchanger operation to reduce the air-conditioning load when starting running the air conditioner	0000: Invalid	Adjusting this setting is necessary for all the Air to Air Heat Exchangers in the group. (System equipped with the Air to Air Heat Exchanger and air conditioners)
4C	Nighttime heat purge	0000: Invalid 0001-0048: Start after [SET DATA of DN] x 1 hour(s) * Setting for the time before the nighttime heat purge operation starts	0000: Invalid	Adjusting this setting is necessary for all the Air to Air Heat Exchangers in the group. (System equipped with the Air to Air Heat Exchanger and air conditioners)

Code	Description	SET DATA and description	Factory default	Note
4D	Setting of the exhausting fan operation below −15°C (OA)	0000: Exhausting fan run 0001: Exhausting fan stop * The supplying fan stops when the temperature is below −15°C. (OA)	0000: Exhausting fan run	Adjusting this setting is necessary for all the Air to Air Heat Exchangers in the group.
4E	Setting of the linked operation with external devices	0000: ON/OFF linked 0001: ON linked 0002: OFF linked * Specifies whether the ON/OFF operation of the Air to Air Heat Exchanger is linked with the external device operation	0000: ON/OFF linked	Adjusting this setting is necessary for the Air to Air Heat Exchanger to which an adapter for remote ON/OFF control (sold separately) is connected.
5C	Damper output	0000: Normal 0001: Support of 24-hour fan, nighttime heat purge	0000: Normal	Adjusting this setting is necessary for the Air to Air Heat Exchanger which transfers the operation output.
9D	Start/Stop by power on/off	0000: Invalid 0001: Valid * Starts/Stops running the Air to Air Heat Exchanger by powering on/off.	0000: Invalid	Adjusting this setting is necessary for the header unit. (System equipped with the Air to Air Heat Exchanger only)
EA	Changing the ventilation mode	0001: Bypass mode 0002: Heat Exchange mode 0003: Automatic mode * Compatible with systems without a remote controller and RBC-AMT32E, RBC-AMS41E	0003: Automatic mode	*1
EB	Changing the ventilation Fan speed	0002: High 0003: Low 0004: Imbalanced * “High” may be “Extra High”. * Compatible with systems without a remote controller and RBC-AMT32E, RBC-AMS41E	0002: High	*1
EC	Automatic ventilation control in air-conditioning linkage	0000: Valid only when air-conditioner is running 0001: Valid even when air-conditioner is stopped 0002: Invalid (Control Air to Air Heat Exchanger only) * Automatic ventilation control setting in air-conditioning linkage	0000: Valid only when air-conditioner is running	Adjusting this setting is necessary for all the Air to Air Heat Exchangers in the group.
ED	Changing the operation output	0000: ON during normal operation 0001: ON during normal operation, 24-hour ventilation, or nighttime heat purge operation 0002: ON during 24-hour ventilation or nighttime heat purge operation 0003: ON when SA fan is running 0004: ON when EA fan is running	0000: ON during normal operation	Adjusting this setting is necessary for the Air to Air Heat Exchanger which transfers the operation output.
EE	Changing the abnormal signal/ Bypass mode signal output	0000: ON when an abnormal signal is detected 0001: ON when the Bypass mode signal is detected	0000: ON when an abnormal signal is detected	Adjusting this setting is necessary for the Air to Air Heat Exchanger which transfers the operation output.

*1 Adjusting this setting is necessary for the header unit when using a system equipped with the Air to Air Heat Exchanger only, and the Air to Air Heat Exchanger with the smallest indoor unit address number when using a system equipped with the Air to Air Heat Exchanger and air conditioners.

Model
Code: 10

Setting data	Model	Model name (abbreviation)
0050*	Air to Air Heat Exchanger (Ceiling-embedded)	VN-M***HE series

* Factory default value of EEPROM installed on the service circuit board

Capacity of the Air to Air Heat Exchanger
Code: 11

Setting data	Type
0000*	Invalid
0001	150m^3/h type
0002	250m^3/h type
0003	350m^3/h type
0004	500m^3/h type
0005	650m^3/h type
0006	800m^3/h type
0007	1000m^3/h type

* Factory default value of EEPROM installed on the service circuit board

■ Remote controller switch monitoring function

This function is available to call the service monitor mode from the remote controller during a test run to acquire temperatures of sensors of indoor unit (Air to Air Heat Exchanger).

1 **Push CL and TEST buttons simultaneously for at least 4 seconds to call the service monitor mode.**

2 **Pushing TEMP. ▼ ▲ buttons, select the number of sensor (CODE No.) to be monitored. (See the following table.)**

3 **Pushing UNIT LOUVER (left side of the button), select an indoor unit to be monitored.**

* The unit number of the Air to Air Heat Exchanger is 31-OO.

4 **Push TEST button to return to the normal display.**

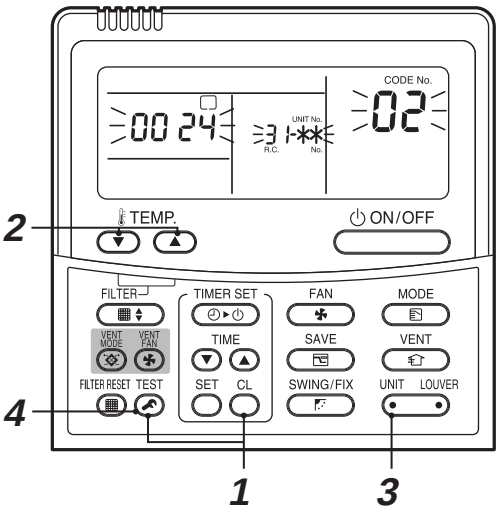

Indoor unit data (Air to Air Heat Exchanger)	
CODE No.	**Data name**
02	Indoor unit Return air temperature (TRA)
F0	Microcomputer cumulative energized hours (x 100h)
F2	Supply air fan cumulative energized hours (x 100h)
F3	Filter cumulative hours (x1 h)
FA	Indoor unit outdoor air temperature (TOA)

8 Air to Air Heat Exchanger Unit and Air-Conditioning System

Examples of connections available when installing an Air to Air Heat Exchanger unit (VN-M OO HE)

Classified by specifications				
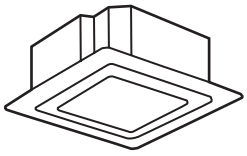	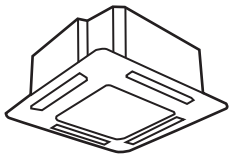	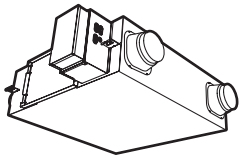	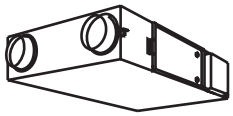	Remote controller line * Adapter omitted
1 Indoor unit compatible with Air to Air Heat Exchanger	**2** Indoor unit not yet compatible with Air to Air Heat Exchanger	**3** New Air to Air Heat Exchanger unit (VN-M OO HE)	**4** Old Air to Air Heat Exchanger unit (VN- OO TE) (VN-1K TAE) (VN-1K TBE)	TCC-LINK line

Remote controller
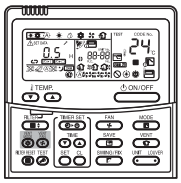
NRC-01HE

Not on the assumption of connection with an Air to Air Heat Exchanger unit or via general-purpose device interface

Pattern 1	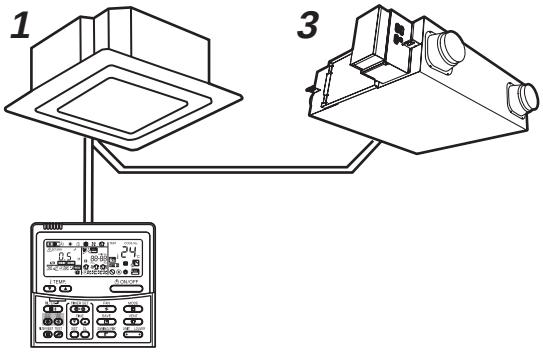  Possible
Pattern 2	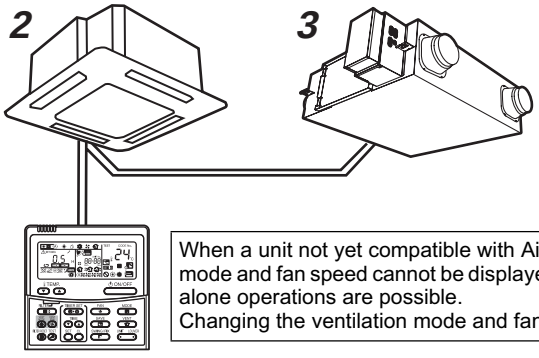  Possible When a unit not yet compatible with Air to Air Heat Exchange is connected, the ventilation mode and fan speed cannot be displayed, but the linkage and Air to Air Heat Exchanger stand alone operations are possible. Changing the ventilation mode and fan speed is also possible depending on the DN setting.

Pattern 3	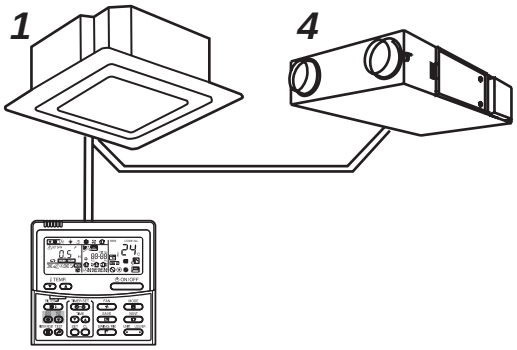 Not Possible
Pattern 4	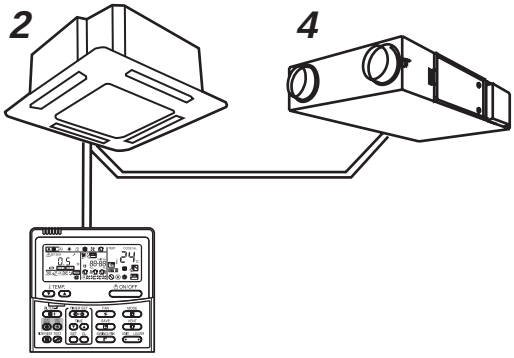 Not Possible
Pattern 5	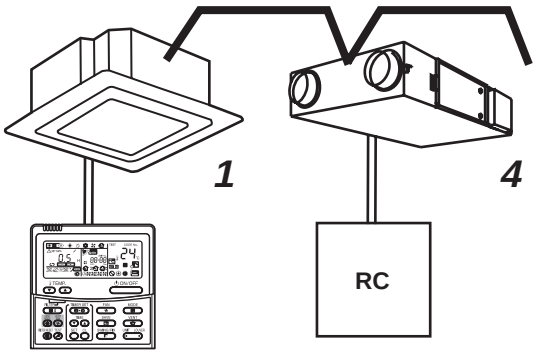 Not Possible
Pattern 6	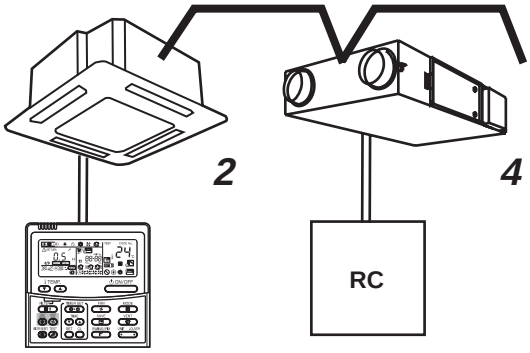 Not Possible

Pattern 7	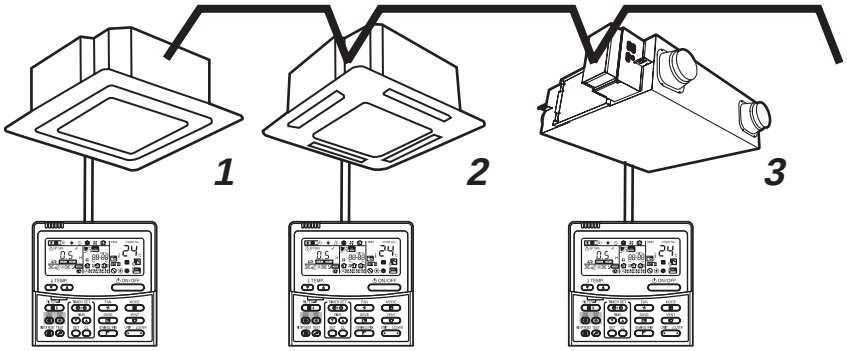 Possible
Pattern 8	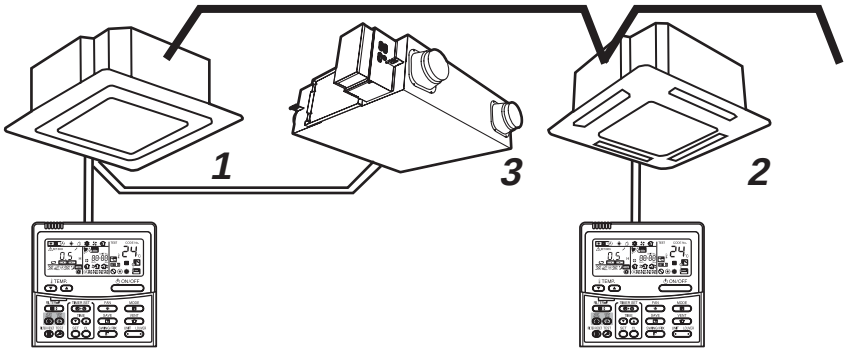 Possible
Pattern 9	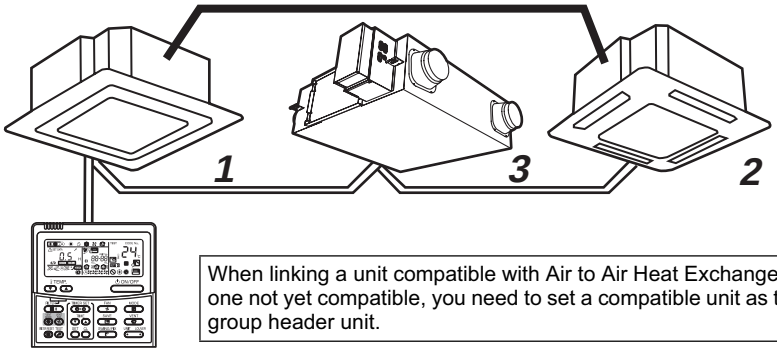 Possible When linking a unit compatible with Air to Air Heat Exchange to one not yet compatible, you need to set a compatible unit as the group header unit.

■ List of Indoor Units (SMMS Series) Compatible with the Air to Air Heat Exchanger Unit

- "O" in the tables indicates an indoor unit compatible with the Air to Air Heat Exchanger unit.
  * For the 4-way air discharge type/2-way air discharge type, products produced in September 2010 or later are compatible.

- "–" in the tables indicates an indoor unit not yet compatible with the Air to Air Heat Exchanger unit.
  * The linkage operation is possible, but changing the ventilation mode and fan speed is not possible. (Will be possible if the DN setting is changed)

- If "O" is shown but the development number is older than that indicated in the tables, the indoor unit is not yet compatible with the Air to Air Heat Exchanger unit.
  * The linkage operation is possible, but changing the ventilation mode and fan speed is not possible. (Will be possible if the DN setting is changed)

Indoor unit type	Cassette type				Duct type			Ceiling type	High wall type
	4-way air discharge type	Compact 4-way air discharge type	2-way air discharge type	1-way air discharge type	Duct type	Built-in type	Slim duct type		
Development No. (Series No.)	2	4	2	4	4	4	4	4	4
Compatibility	○	○	○	○	○	○	○	○	–

Indoor unit type	Floor type			Floor standing type	Fresh air intake type
	Cabinet type	Concealed type	Console type		
Development No. (Series No.)	4	4	4	4	1
Compatibility	○	○	○	○	–

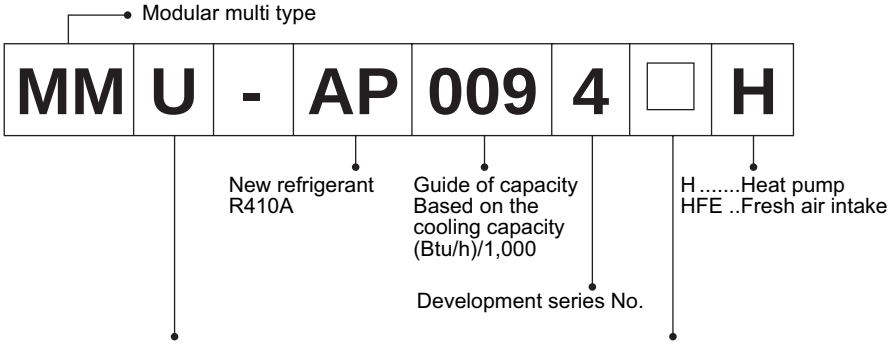

Type	Note on type
U .....Cassette type	None ...4-way air discharge type M .....Compact 4-way air discharge type W.....2-way air discharge type S.....1-way air discharge type Y.....Small sized 1-way air discharge type
D .....Duct type	None ...High static pressure type B.....Built-in type SP .....Slim duct type
C .....Ceiling type	None ...Ceiling type
K.....High wall type	M .....High wall type
L .....Floor type	None ...Cabinet type B.....Concealed type N .....Console type
F .....Floor standing type	None ...Floor standing type

■ List of Indoor Units (DI, SDI Series) Compatible with Air to Air Heat Exchanger Unit

- “O” in the tables indicates an indoor unit compatible with the Air to Air Heat Exchanger unit.
  * For the 4-way air discharge type/Duct type/Slim duct type, products produced in September 2010 or later are compatible.

- “–” in the tables indicates an indoor unit not yet compatible with the Air to Air Heat Exchanger unit.
  * The linkage operation is possible, but changing the ventilation mode and fan speed is not possible. (Will be possible if the DN setting is changed)

- If “O” is shown but the development number is older than that indicated in the tables, the indoor unit is not yet compatible with the Air to Air Heat Exchanger unit.
  * The linkage operation is possible, but changing the ventilation mode and fan speed is not possible. (Will be possible if the DN setting is changed)

Indoor unit type	Cassette type		Duct type			Ceiling type	High wall type	Flexi type
	4-way air discharge type	Compact 4-way air discharge type	Duct type	Built-in type	Slim duct type			
Development No. (Series No.)	4	4	2	4	4	4	4	2
Compatibility	○	○	○	○	○	○	–	–

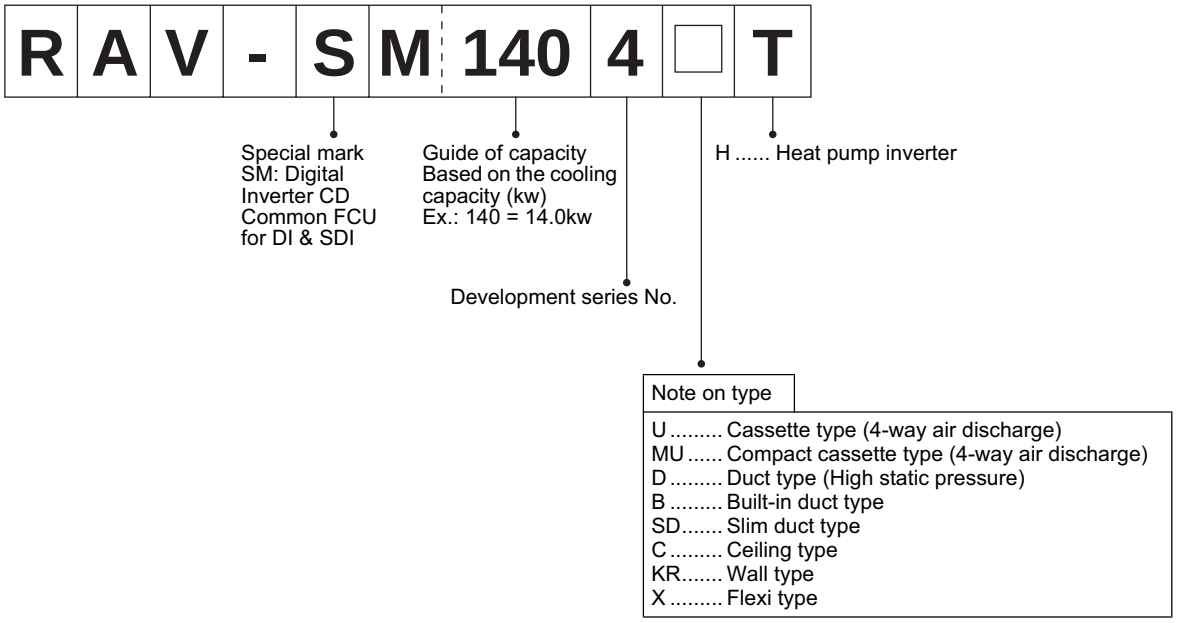

Air to Air Heat Exchanger Unit and (SMMS Series) Air-Conditioning System

System	Central control	Address	Air to Air Heat Exchanger only				Linked with air-conditioner			
Air to Air Heat Exchanger and Air-Conditioner (SMMS series)	Without central control		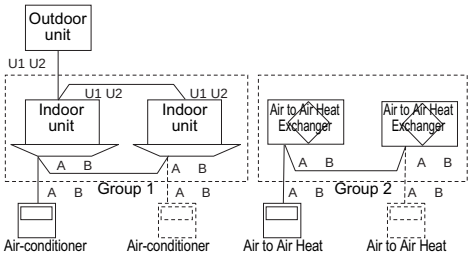				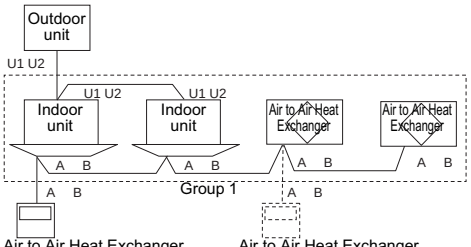			
		Line address	1	1	31	31	1	1	31	31
		Indoor unit address	1	2	1	2	1	2	1	2
		Group address	1	2	1	2	1	2	2	2
		Central control address	—	—	—	—	—	—	—	—
		Air to Air Heat Exchanger address settings	• The line (system) address of an Air to Air Heat Exchanger unit is always 31. • The indoor unit address of an Air to Air Heat Exchanger unit needs to be manually specified in No.1 to No.4 of SW702 and in No.1 and No.2 of SW703. • The group address of only one Air to Air Heat Exchanger unit needs to be manually specified to “header: ON” in No.4 of SW703.				• The line (system) address of an Air to Air Heat Exchanger unit is always 31. • The indoor unit address of an Air to Air Heat Exchanger unit needs to be manually specified in No.1 to No.4 of SW702 and in No.1 and No.2 of SW703. (The setting of the smallest address applies to the remote controller display.) • The group address of an Air to Air Heat Exchanger unit does not need to be specified.			
		Remote controller	Air-conditioner group • RBC-AMT32E, RBC-AMS41E, and NRC-01HE can be used. Air to Air Heat Exchanger group • RBC-AMT32E cannot be connected. • RBC-AMS41E can be used. (*1) • NRC-01HE can be used.				• RBC-AMT32E, RBC-AMS41E can be used. (*1) • NRC-01HE can be used.			
		Note					• The group header must be an indoor unit compatible with Air to Air Heat Exchange. • If the group header is an indoor unit not yet compatible with Air to Air Heat Exchange, the linkage operation is possible, but the ventilation fan speed and mode of the Air to Air Heat Exchanger cannot be changed (can be changed depending on the DN setting). • The group follower can run without any problems even if it is an indoor unit not yet compatible with Air to Air Heat Exchange.			
	With central control		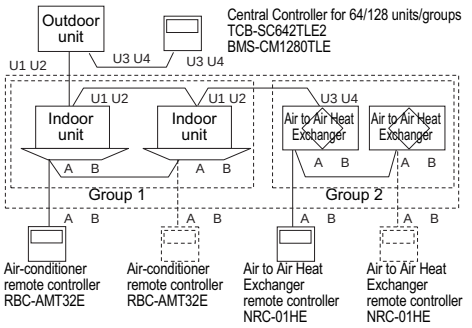				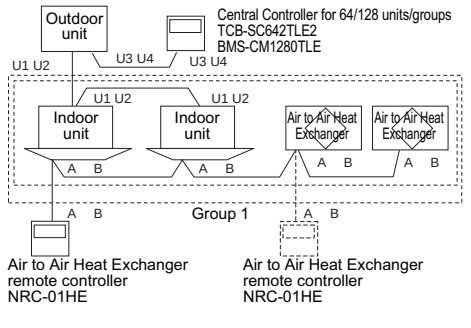			
		Line address	1	1	31	31	1	1	31	31
		Indoor unit address	1	2	1	2	1	2	1	2
		Group address	1	2	1	2	1	2	2	2
		Central control address	1	(1)	2	(2)	1	(1)	(1)	(1)
		Air to Air Heat Exchanger address settings	• The line (system) address of an Air to Air Heat Exchanger unit is always 31. • The indoor unit address of an Air to Air Heat Exchanger unit needs to be manually specified in No.1 to No.4 of SW702 and in No.1 and No.2 of SW703. • The group address of only one Air to Air Heat Exchanger unit needs to be manually specified to “header: ON” in No.4 of SW703.				• The line (system) address of an Air to Air Heat Exchanger unit is always 31. • The indoor unit address of an Air to Air Heat Exchanger unit needs to be manually specified in No.1 to No.4 of SW702 and in No.1 and No.2 of SW703. (The setting of the smallest address applies to the remote controller display.) • The group address of an Air to Air Heat Exchanger unit does not need to be specified.			
		Remote controller	Air-conditioner group • RBC-AMT32E, RBC-AMS41E, and NRC-01HE can be used. Air to Air Heat Exchanger group • RBC-AMT32E cannot be connected. • RBC-AMS41E can be used. (*1) • NRC-01HE can be used.				• RBC-AMT32E, RBC-AMS41E can be used. (*1) • NRC-01HE can be used.			
		Note	• Connect central control wiring only to the header of the Air to Air Heat Exchanger. • Do not connect remote controller wiring between the indoor unit and Air to Air Heat Exchanger unit.				• The group header must be an indoor unit compatible with Air to Air Heat Exchange. • If the group header is an indoor unit not yet compatible with Air to Air Heat Exchange, the linkage operation is possible, but the ventilation fan speed and mode of the Air to Air Heat Exchanger cannot be changed (can be changed depending on the DN setting). • The group follower can run without any problems even if it is an indoor unit not yet compatible with Air to Air Heat Exchange. • Do not connect central control wiring between the indoor unit and Air to Air Heat Exchanger unit.			

(*1) Ventilation fan speed and mode of the Air to Air Heat Exchanger cannot be changed (can be changed depending of the DN setting).

Air to Air Heat Exchanger Unit and (DI, SDI Series) Air-Conditioning System

System	Central control	Address	Air to Air Heat Exchanger only				Linked with air-conditioner			
Air to Air Heat Exchanger and Air-Conditioner (DI, SDI series)	Without central control		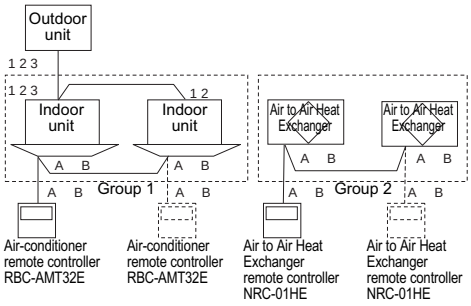				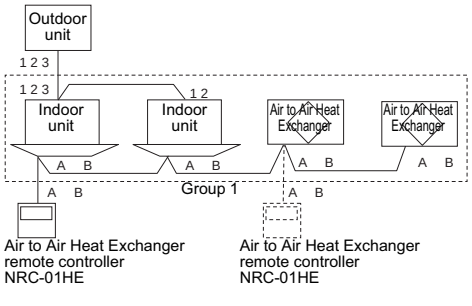			
		Line address	1	1	31	31	1	1	31	31
		Indoor unit address	1	2	1	2	1	2	1	2
		Group address	1	2	1	2	1	2	2	2
		Central control address	—	—	—	—	—	—	—	—
		Air to Air Heat Exchanger address settings	• The line (system) address of an Air to Air Heat Exchanger unit is always 31. • The indoor unit address of an Air to Air Heat Exchanger unit needs to be manually specified in No.1 to No.4 of SW702 and in No.1 and No.2 of SW703. • The group address of only one Air to Air Heat Exchanger unit needs to be manually specified to “header” in No.4 of SW703.				• The line (system) address of an Air to Air Heat Exchanger unit is always 31. • The indoor unit address of an Air to Air Heat Exchanger unit needs to be manually specified in No.1 to No.4 of SW702 and in No.1 and No.2 of SW703. (The setting of the smallest address applies to the remote controller display.) • The group address of an Air to Air Heat Exchanger unit does not need to be specified.			
		Remote controller	Air-conditioner group • RBC-AMT32E, RBC-AMS41E, and NRC-01HE can be used. Air to Air Heat Exchanger group • RBC-AMT32E cannot be connected. • RBC-AMS41E can be used. (*1) • NRC-01HE can be used.				• RBC-AMT32E, RBC-AMS41E can be used. (*1) • NRC-01HE can be used.			
		Note					• The group header must be an indoor unit compatible with Air to Air Heat Exchange. • If the group header is an indoor unit not yet compatible with Air to Air Heat Exchange, the linkage operation is possible, but the ventilation fan speed and mode of the Air to Air Heat Exchanger cannot be changed (can be changed depending on the DN setting). • The group follower can run without any problems even if it is an indoor unit not yet compatible with Air to Air Heat Exchange.			
	With central control		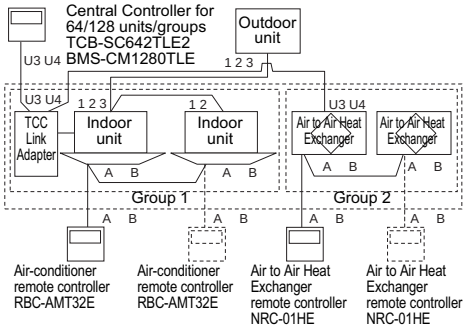				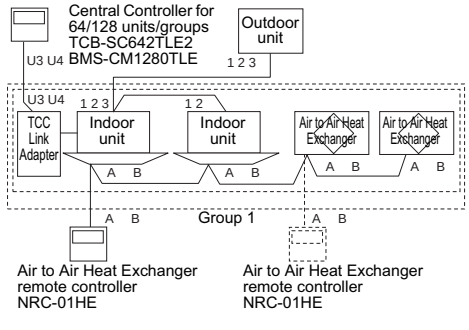			
		Line address	1	1	31	31	1	1	31	31
		Indoor unit address	1	2	1	2	1	2	1	2
		Group address	1	2	1	2	1	2	2	2
		Central control address	1	(1)	2	(2)	1	(1)	(1)	(1)
		Air to Air Heat Exchanger address settings	• The line (system) address of an Air to Air Heat Exchanger unit is always 31. • The indoor unit address of an Air to Air Heat Exchanger unit needs to be manually specified in No.1 to No.4 of SW702 and in No.1 and No.2 of SW703. • The group address of only one Air to Air Heat Exchanger unit needs to be manually specified to “header” in No.4 of SW703.				• The line (system) address of an Air to Air Heat Exchanger unit is always 31. • The indoor unit address of an Air to Air Heat Exchanger unit needs to be manually specified in No.1 to No.4 of SW702 and in No.1 and No.2 of SW703. (The setting of the smallest address applies to the remote controller display.) • The group address of an Air to Air Heat Exchanger unit does not need to be specified.			
		Remote controller	Air-conditioner group • RBC-AMT32E, RBC-AMS41E, and NRC-01HE can be used. Air to Air Heat Exchanger group • RBC-AMT32E cannot be connected. • RBC-AMS41E can be used. (*1) • NRC-01HE can be used.				• RBC-AMT32E, RBC-AMS41E can be used. (*1) • NRC-01HE can be used.			
		Note	• Connect central control wiring only to the header of the Air to Air Heat Exchanger. • Do not connect remote controller wiring between the indoor unit and Air to Air Heat Exchanger unit.				• The group header must be an indoor unit compatible with Air to Air Heat Exchange. • If the group header is an indoor unit not yet compatible with Air to Air Heat Exchange, the linkage operation is possible, but the ventilation fan speed and mode of the Air to Air Heat Exchanger cannot be changed (can be changed depending on the DN setting). • The group follower can run without any problems even if it is an indoor unit not yet compatible with Air to Air Heat Exchange. • Do not connect central control wiring between the indoor unit and Air to Air Heat Exchanger unit.			

(*1) Ventilation fan speed and mode of the Air to Air Heat Exchanger cannot be changed (can be changed depending of the DN setting).

9 Failure Diagnosis

9-1. Failure Diagnosis

9-1-1. Before diagnosing failure

Symptom	Cause
Operation does not start after pressing the button.	• Is the circuit breaker turned off?
	• Has a power failure occurred?
	• Does the indicator light up? (The ventilation delay setting is set to CODE No. [49] “ON” and it is not malfunction. The Air to Air Heat Exchanger will start running after the time set has passed.)
• Air does not come out. • The sound is loud.	Are the filters or heat exchange elements clogged? For maintenance, see page 134.
The unit runs though the operation lamp does not turn on.	Does the or 24H indicator appear on the display? The nighttime heat purge operation or 24-hour ventilation is set to CODE No. [4C] [49] “ON”. See page 80 for how to use the functions.
The unit starts running without any operation of the remote controller.	Has the unit just recovered from a power failure or have you just turned on the circuit breaker? (The settings concerning recovering from power failure or start/stop by power on/off are set to CODE No. [28] [9D] “ON”. Consult your dealer for details.)

9-1-2. How to diagnose failure

Situation	Where to check	Cause	Remedy
Displayed on the remote controller…Depends on the check code.			
Displayed on the central controller…Depends on the check code.			
The motor does not run.	• Lead wire	The circuit is open.	• Replace the motor with a new one.
	• Connection	A connection is loose.	• Connect firmly. • (Electric board, Motor connector)
	• Motor	The motor bearing is locked. The motor coil or temperature fuse is broken.	• Replace the motor with a new one.
	• Fan rotation	The fan is not rotating.	• Remove any obstacles.
	• Capacitor	The capacitor is not working properly.	• Replace the capacitor with a new one.
An abnormal sound is heard from the inside.	• Motor	Electromagnetic sound (the motor is buzzing). The bearing is in poor condition.	• Replace the motor with a new one.
	• Fan	The fan has not been installed properly. A foreign object has been taken in. The fan has been deformed.	• Install the fan securely. • Remove the foreign object. • Replace the fan with a new one.
	• Screws	A screw(s) is/are loose (not tightened completely).	• Tighten the screws firmly.
	• Filter	The filter is clogged.	• Clean the filter.
	• Heat exchange element	The heat exchange element is clogged.	• Clean the heat exchange element.
The motor is not running fast enough.	• Capacitor	The capacitor is not working properly.	• Replace the capacitor with a new one.
	• Motor	The motor bearing is not running smoothly.	• Replace the motor with a new one.
The damper does not open or close.	• Lead wire	A connection is loose.	• Connect firmly.
	• Damper motor	The coil of the damper motor is broken.	• Replace the damper motor with a new one.
	• Damper	Something is caught on the sliding part.	• Remove whatever is caught.
	• Connector assembly	A connection is loose.	• Replace the assembled connector with a new one.

9-2. How to Check for Errors

The remote controller (local remote controller or central control) is equipped with an LCD that displays the operation status. If an error has occurred, see the following table to check the error of the Air to Air Heat Exchanger unit using the failure diagnosis function.

The following tables show lists of the check codes indicated by each device. See the following tables for how to check depending on the location.

* For checking using the indoor remote controller or TCC-LINK central controller…See “Local remote controller & TCC-LINK central controller” in the following table.

Check code list (Indoor)

(Air to Air Heat Exchanger unit)

Check code Remote controller & TCC-LINK central controller	Typical cause of error	Description
E03	Indoor unit - remote controller regular communication error	No data is received from the remote controller or network adapter. (Also no central control communication)
E08	Duplicate indoor addresses	An address the same as the self-address was detected.
E18	Header indoor unit - indoor follower unit regular communication error	Regular communication is not possible between the header and follower indoor units.
F17	Outdoor air temperature sensor (TOA) error	Open-circuit or short-circuit of the outdoor air temperature sensor (TOA) was detected.
F18	Return air temperature sensor (TRA) error	Open-circuit or short-circuit of the return air temperature sensor (TRA) was detected.
F29	Indoor unit or other P.C. board error	EEPROM error (Another error may have been detected)
L03	Duplicate header indoor units	There are two or more header units in the group.
L08	Indoor group address not set	The indoor address group has not been set. (May also be detected on the outdoor unit side)
L09	Indoor power level not set	The indoor power level has not been set.
L20	Duplicate central control addresses	Central control addresses are duplicate.
P31	Other indoor unit error	The follower unit in the group cannot be run due to the E03/L07/L03/L08 alerts of the header unit.

(Remote controller)

Check code Local remote controller	Typical cause of error	Description
E01	No header remote controller, Remote controller communication error	No signal can be received from the indoor unit. The header remote controller has not been set (including double remote controllers).
E02	Remote controller transmission error	No signal can be sent to the indoor unit.
E09	Duplicate header remote controllers	Two remote controllers are set as header in the double-remote controller control. (* The header indoor unit stops signaling an error, and the follower indoor units continue running.)

(Central control device)

Check code TCC-LINK central controller	Typical cause of error	Description
C05	Central control communication (transmission) error	No central control signal can be sent.
C06	Central control communication (reception) error	No central control signal can be received.
P30	Follower unit error	An error occurred on the follower unit in the group. (“***” is displayed on the local remote controller)

NOTE

Even if the same error (e.g. communication error) has occurred, the check code may differ depending on the device.
If the error was detected by the local remote controller or central control device, the error does not always affect the operations of the Air to Air Heat Exchanger unit.

9-3. Troubleshooting

■ Confirmation and check

When an error occurred in the Air to Air Heat Exchanger, the check code and the unit No. of Air to Air Heat Exchanger appear on the display part of the remote controller.
The check code is only displayed during the operation.
If the display disappears, operate the Air to Air Heat Exchanger according to the following “Confirmation of error history” for confirmation.

* Unit No. of Air to Air Heat Exchanger is 31-OO.

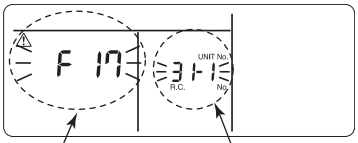

Check code

Unit No. of the Air to Air Heat Exchanger with a problem

■ Confirmation of error history

When an error occurred on the Air to Air Heat Exchanger, the error history can be confirmed with the following procedure. (The error history is stored in memory up to 4 troubles.)
The error can be confirmed from both operating status and stop status.

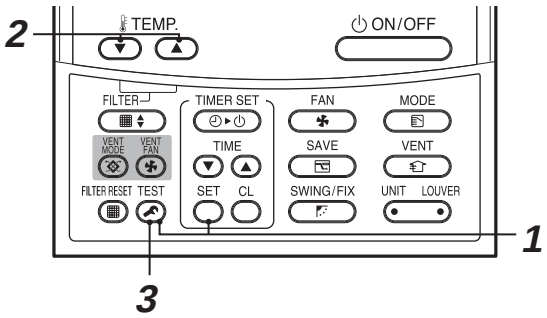

1 **When pushing SET and TEST buttons at the same time for 4 seconds or more, the following display appears.**
If [Service check] is displayed, the mode enters in the trouble history mode.

- [**01**: Order of error history] is displayed in CODE No. window.
- [Check code] is displayed in CHECK window.
- [Air to Air Heat Exchanger address in which an error occurred] is displayed in Unit No.

* Unit No. of Air to Air Heat Exchanger is 31-OO.

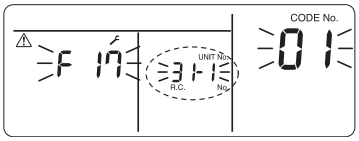

2 **Every pushing of TEMP. button used to set temperature, the error history stored in memory is displayed in order.**
The numbers in CODE No. indicate CODE No. [**01**] (latest) → [**04**] (oldest).

REQUIREMENT

Do not push CL button because all the error history of the Air to Air Heat Exchanger will be deleted.

3 **After confirmation, push TEST button to return to the usual display.**

How to read the code display

<Seven-segment display>

<Actual character>

0 1 2 3 4 5 6 7 8 9 A b C d E F H J L P

■ TCC Link Central Control Remote Controller (TCB-SC642TLE2)

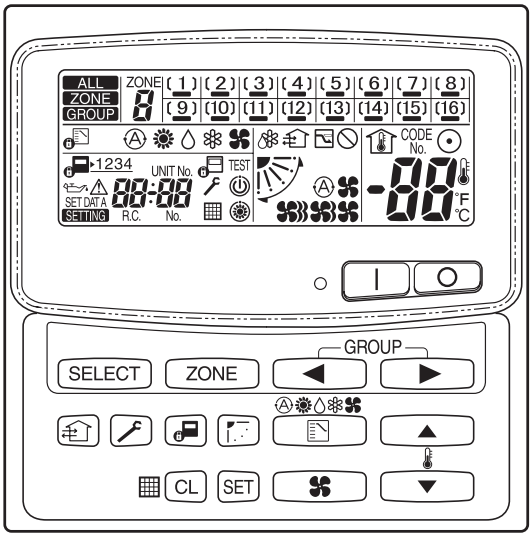

(1) Checking and testing

If an error has occurred in the Air to Air Heat Exchanger, the check code and the unit No. of the Air to Air Heat Exchanger appear on the display of the remote controller.
Unit No. of the Air to Air Heat Exchanger is 31-OO.
Check codes are only displayed while the Air to Air Heat Exchanger is in operation.
If the display has already disappeared, access the error history by following the procedure described below.

Display of unit No. **Display of check code**

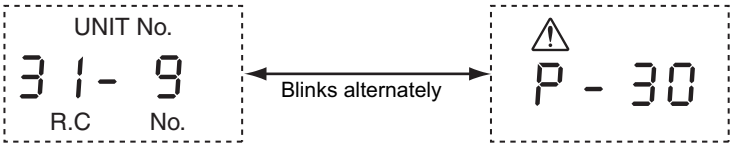

(2) Checking the error history

If an error has occurred on the Air to Air Heat Exchanger, the error history can be checked with the following procedure. Up to four errors are stored in memory.
The error history can be accessed regardless of whether the Air to Air Heat Exchanger is in operation or shut down.

1 **Press and hold the [🔧] and [SET] buttons simultaneously for at least four seconds.**

2 **" 🔧 " lights up, and CODE No. "01" is displayed.**

3 **If there is an error history when a group number is selected (blinking), the unit No. and the latest error history information are displayed alternately.**

Display of unit No. **Display of check code**

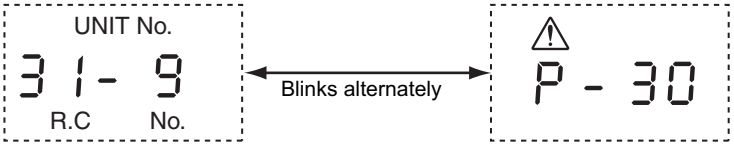

4 **To check other error history items, push the 🌡 buttons [▲] and [▼] to select another check CODE No. (01–04).**

5 **To check on a check code relating to another group, push the [ZONE] and [◀] [▶] buttons to select a group number.**
Do not push the [CL] button, as it will erase the entire error history of the selected group.

6 **To finish the service check, push the [🔧] button.**

9-4. Check Codes Displayed on the Remote Controller and Locations to Be Checked

Check code Remote controller	Location of detection	Check code name	System status	Error detection conditions	Items to check (locations)
E01	Remote controller	Indoor–remote controller communication error (detected at remote controller end)	Stop of corresponding unit only	Communication between indoor PC board and remote controller is disrupted.	• Check remote controller inter-unit tie cable (A/B). • Check for a broken wire or bad connector contact. • Check indoor power supply. • Check for defects in the indoor PC board. • Check remote controller address settings (when two remote controllers are in use). • Check remote controller board.
E02	Remote controller	Remote control transmission error	Stop of corresponding unit only	Signal cannot be transmitted from remote controller to indoor unit.	• Check internal transmission circuit of remote controller. • Replace remote controller as necessary.
E03	Indoor	Indoor–remote controller communication error (detected at indoor end)	Stop of corresponding unit only	There is no communication from the remote controller and communication adapter.	• Check remote controller and network adapter wiring.
E08	Indoor I/F	Duplicate indoor address	Stop of corresponding unit only	More than one indoor unit are assigned the same address.	• Check indoor address. • Check for any change made to remote controller connection (group/individual) since indoor address setting.
E09	Remote controller	Duplicate master remote controller	Stop of corresponding unit only	In two-remote controller configuration, both controllers are set up as master. (Header indoor unit is shut down with alarm, while follower indoor units continue operating.)	• Check remote controller settings. • Check remote controller board
E18	Indoor	Error in communication between indoor header and follower units	Stop of corresponding unit only	Periodic communication between indoor header and follower units cannot be maintained.	• Check remote controller wiring. • Check indoor power supply wiring. • Check PC boards of indoor units.
F17	Air to Air Heat Exchanger	Outdoor air temperature sensor (TOA) error	Stop of corresponding unit only	The resistance value of the sensor is infinite or zero (open or short circuit).	• Check TOA sensor connector connection and wiring. • Check TOA sensor resistance characteristics. • Check for defective Air to Air Heat Exchanger PC board.
F18	Air to Air Heat Exchanger	Return air temperature sensor (TRA) error	Stop of corresponding unit only	The resistance value of the sensor is infinite or zero (open or short circuit).	• Check TRA sensor connector connection and wiring. • Check TRA sensor resistance characteristic. • Check for defective Air to Air Heat Exchanger PC board.
F29	Indoor	Other indoor error	Stop of corresponding unit only	Indoor PC board is not operating normally.	• Check for defect in indoor PC board (faulty EEPROM)
L03	Indoor	Duplicate indoor header unit	Stop of corresponding unit only	There is more than one header unit in the group.	• Check indoor address. • Check for any change made to remote controller connection (group/individual) since indoor address setting.
L08	Indoor	Indoor group/ addresses not set	Stop of corresponding unit only	Address has not been set.	• Check indoor address. **Note:** This code is displayed when the power is turned on for the first time after installation.
L09	Indoor	Indoor capacity not set	Stop of corresponding unit only	Capacity of indoor unit has not been set.	Set indoor capacity (DN = 11)

Check code Remote controller	Location of detection	Check code name	System status	Error detection conditions	Items to check (locations)
L20	Indoor	Duplicate central control address	Stop of corresponding unit only	Duplicate central control address	• Check central control addresses. • Check network adapter PC board (applicable to AI-NET).
P31	Indoor	Other indoor error (group follower unit error)	Stop of corresponding unit only	There is error in another indoor unit in the group. Detection of E07/L07/ L03/L08	• Check PC boards of indoor units.

* “Indoor” in “location of detection” refers to Air to Air Heat Exchanger and air conditioner indoor units.

Errors detected by TCC-LINK central control device

Check code Remote controller	Location of detection	Check code name	System status	Error detection conditions	Items to check (locations)
C05	TCC-LINK	TCC Link central control device transmission error	Continued operation	Central device is unable to transmit a signal.	• Check for defects in the central control device. • Check for defects in central control communication line. • Check termination resistance setting.
C06	TCC-LINK	TCC Link central control device reception error	Continued operation	Central control device is unable to receive a signal.	• Check for defects in the central control device. • Check for defects in central control communication line. • Check termination resistance setting. • Check power supply for devices at the other end of the central control communication line. • Check for defects in PC boards of devices at the other end of the central control communication line.
P30	TCC-LINK	Group control follower unit error	Continued operation	Error occurs in a follower unit under group control (“P30” is displayed on the central control remote controller).	• Check the check code of the unit where the error was detected.
		Duplicate central control address	Continued operation	Duplicate central control address	• Check address settings.

9-5. Sensor Characteristics

Air to Air Heat Exchanger

▼ Temperature Sensor Characteristics

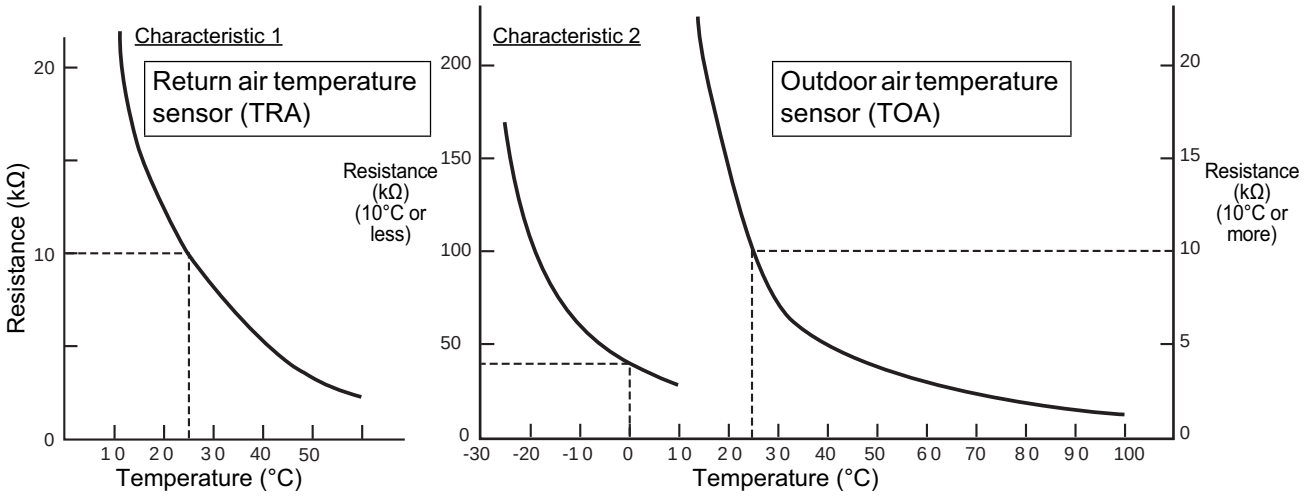

10 Exchanging and Assembling the Main Components

■ Assembling and exchanging the fan components

No.	Component	Procedure	Note
1	Inspection cover (LID, SERVICE) ***1***, ***15***, ***16***	***1.*** Remove the machine screws (M4×12) that fix the inspection cover (LID, SERVICE), pull up the lever (LEVER, LID), then remove the cover.	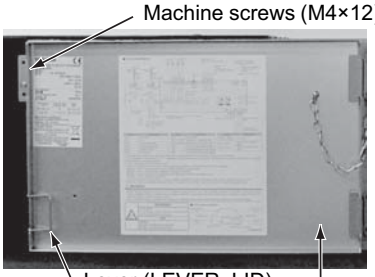
2	Heat exchange element (HEAT EXCHANGER) ***1***, ***2***	***2.*** Hold the handle of the heat exchange element (HEAT EXCHANGER), then pull it out. **Note:** A single heat exchange element (HEAT EXCHANGER) weighs 2 – 4 kg (there are two elements). Be careful not to drop it.	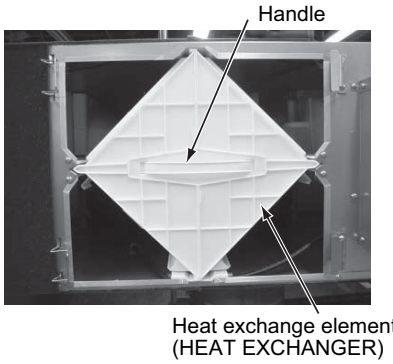
3	Element rail (RAIL) ***1*** - ***3***	***3.*** Remove the two screws (M4×6) that fix the element rail (RAIL) to pull the rail out.	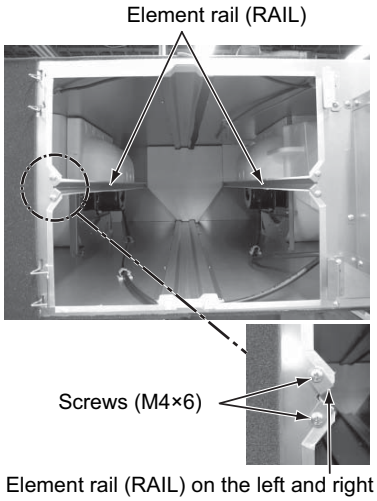
4	Foam cover (COVER, FOAM) ***1*** - ***4***	***4.*** Slide the foam cover (COVER, FOAM) to the center of the product to pull it out.	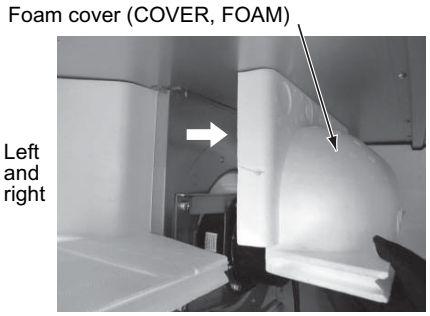

No.	Component	Procedure	Note
5	Electrical control cover (COVER, PC BOARD) ***5***	***5.*** Remove the four screws (M4×6) that fix the electrical control cover (COVER, PC BOARD), then remove the cover.	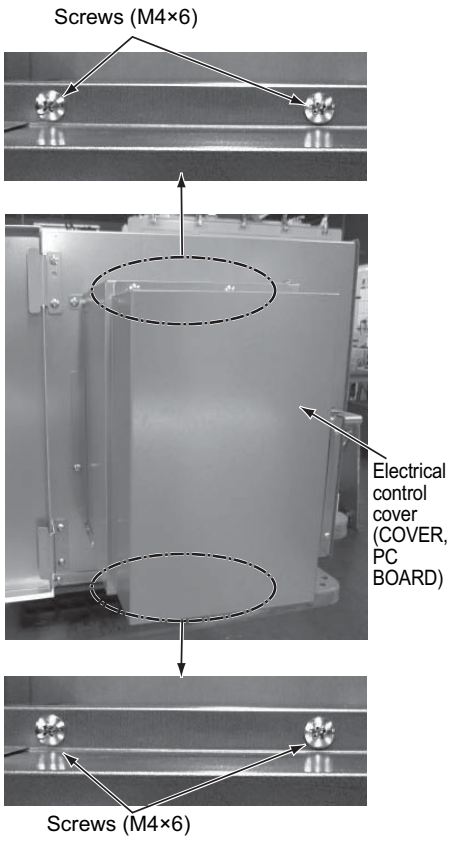
6	Connector of MOTOR ***5***, ***6***	***6.*** Open the electrical control base (LID, ELECTRIC PARTS), and disconnect the connector (CONNECTOR, 1) connected to the connector of motor. **Note:** The connector of the supply motor (MOTOR, SUPPLY) is white. The connector of the exhaust motor (MOTOR, EXHAUST) is black.	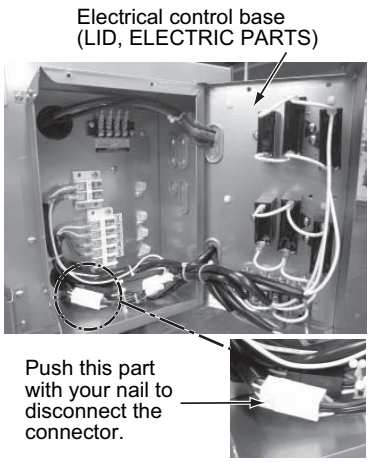
7	Cover (COVER, WIRE) ***1***, ***2***, ***7***	***7.*** Remove the four screws (M4×6) that fix the cover (COVER, WIRE), then remove the cover.	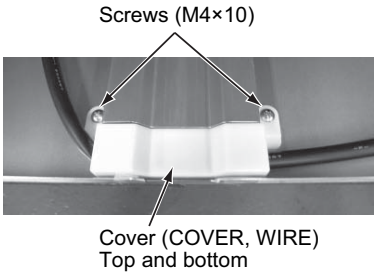

No.	Component	Procedure	Note
8	Fan (FAN) ***1 - 10***	***8.*** Release the big clamp (CLAMP) that fixes the cords of the supply motor (MOTOR, SUPPLY) and exhaust motor (MOTOR, EXHAUST).	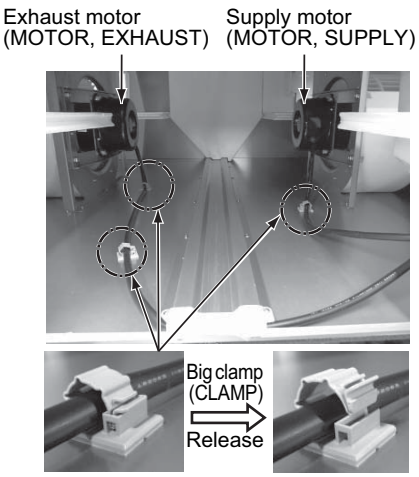
		9. Remove the screws that fix the motor holder (HOLDER, MOTOR), hold the holder, then slide it to the center of the product to remove it. **Note:** 150 – 350 type 4 Screws (M5×8) used 500 – 1000 type 4 Screws (M4×6) used 4 Machine screws with captive washer (M8×16) used	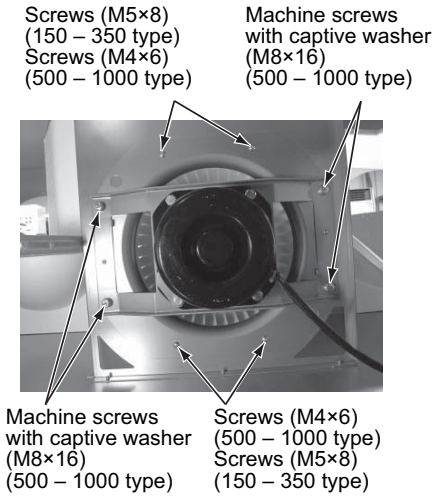
		10. Remove the box nut, spring washer, and washer (NUT) that fix the fan (FAN), then remove the fan. **Note:** For the 800/1000 type, do not lose the key and washer left in the motor shaft.	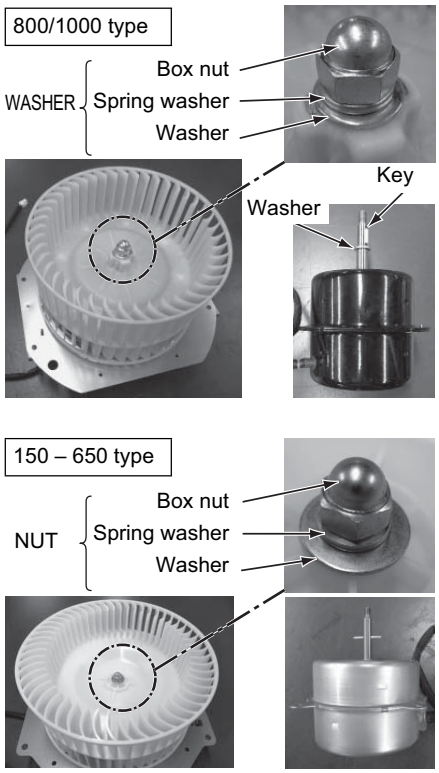

No.	Component	Procedure	Note
9	Supply motor (MOTOR, SUPPLY) ***1*** - ***6***, ***8*** - ***11***	***11.***Remove the screws that fix the supply motor (MOTOR, SUPPLY), then remove the motor.	800/1000 type Hexagon head screws (M8×16) Motor holder (HOLDER, MOTOR) 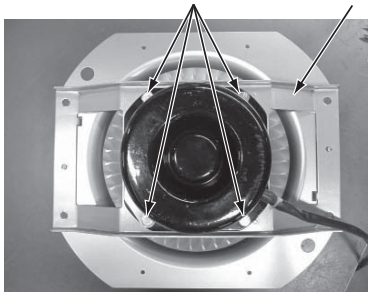
10	Exhaust motor (MOTOR, EXHAUST) ***1*** - ***10***, ***12***	***12.***Remove the screws that fix the exhaust motor (MOTOR, EXHAUST), then remove the motor.	150 – 650 type Pan head screws (M5×8) Motor holder (HOLDER, MOTOR) 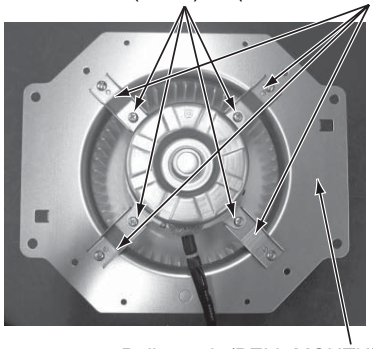 Bell mouth (BELL MOUTH)
11	Motor holder (HOLDER, MOTOR) Bell mouth (BELL MOUTH) ***1*** - ***6***, ***8*** - ***13***	***13.***Remove the four screws (M4×6) that fix the motor holder (HOLDER, MOTOR) and bell mouth (BELL MOUTH), then pull the four holders out. **Note:** The bell mouth (BELL MOUTH) of the 800/1000 type comes with the motor holder (HOLDER, MOTOR).	150 – 650 type Screws (M4×6) 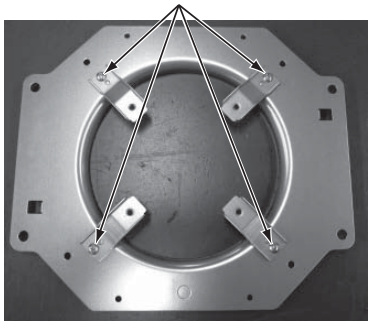

No.	Component	Procedure	Note
12	Exhaust casing (CASE ASSY, EXHAUST) ***1*** - ***4***, ***14***	***14.***Pull the exhaust casing (CASE ASSY, EXHAUST) to the former location of the foam cover (COVER, FOAM), pull the bottom toward you, then turn it horizontally to pull it out.	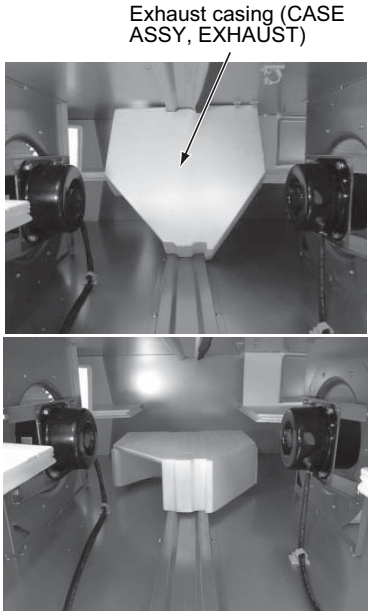
13	Coupling (COUPLING) ***15***, ***16***	***15.***Remove the screws (M4×6) that fix the coupling (COUPLING), then remove the coupling. There is one on the inspection cover (LID, SERVICE), and one on the Lid holder (HOLDER, LID).	
14	Chain (CHAIN) ***15***, ***16***	***16.***Separate the chain (CHAIN) from the coupling (COUPLING).	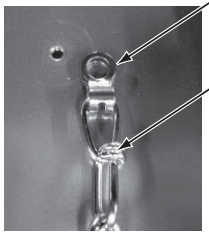
15	Lid holder (HOLDER, LID) ***1***, ***15***, ***17***	***17.***Remove the four screws (M4×6) that fix the lid holder (HOLDER, LID), then remove the holder. Two screws per location (there are two locations).	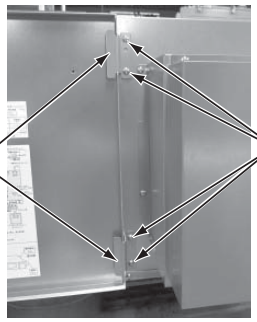

No.	Component	Procedure	Note
16	Fixing lever (LEVER, LID) ***1***, ***18***	***18.***Widen the fixing lever (LEVER, LID) to remove it from the gutter.	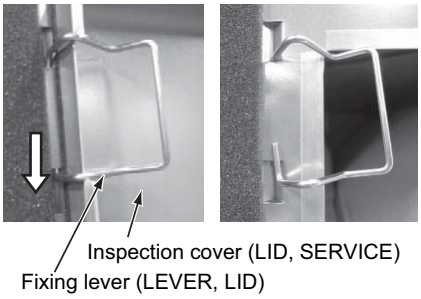
17	Damper motor holder (STAY, DAMPER MOTOR) ***1***, ***2***, ***19***, ***20***	***19.***Release the small clamp (CLAMP) and big clamp (CLAMP) that fix the connector (CONNECTOR, 9), then remove the connector.	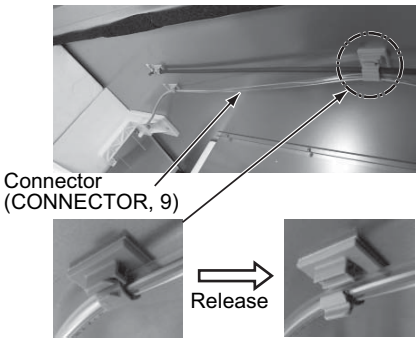
		20.Loosen the screw that fixes the damper motor holder (STAY, DAMPER MOTOR), then slide it toward you to remove it. **Note:** The screw hole of the damper motor holder (STAY, DAMPER MOTOR) is a hook slot, and you can remove the damper motor holder without removing the screw completely.	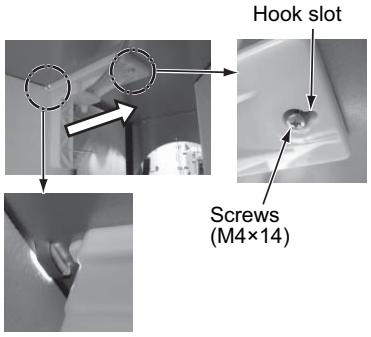
18	Damper motor (MOTOR, LOUVER) ***1***, ***2***, ***19*** - ***22***	***21.***Remove the connector (CONNECTOR, 9) from the damper motor (MOTOR, LOUVER).	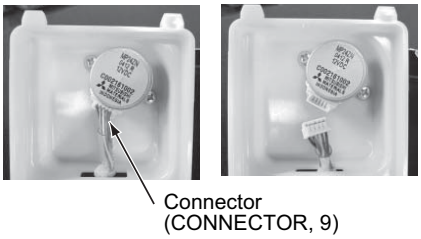
		22.Remove the two screws that fix the damper motor (MOTOR, LOUVER), then remove it.	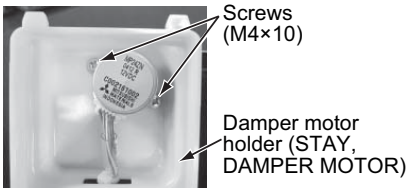
19	Damper (DAMPER) ***1***, ***2***, ***19*** - ***23***	***23.***Remove the damper (DAMPER) from the damper motor holder (STAY, DAMPER MOTOR). Remove the damper motor (MOTOR, LOUVER), then remove the damper from the damper support.	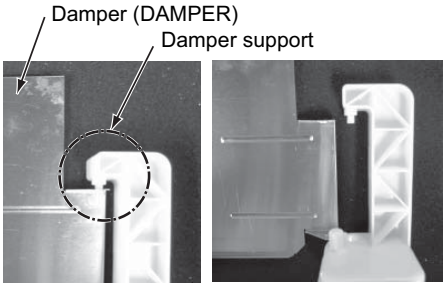

No.	Component	Procedure	Note
20	Electrical control base (LID, ELECTRIC PARTS) Tapping (SCREW, TAPPING) ***5***, ***24***, ***25***, ***26***	***24.*** Disconnect all the connectors from the PC board (PC BOARD). Thread all the connectors through the cord bushes.	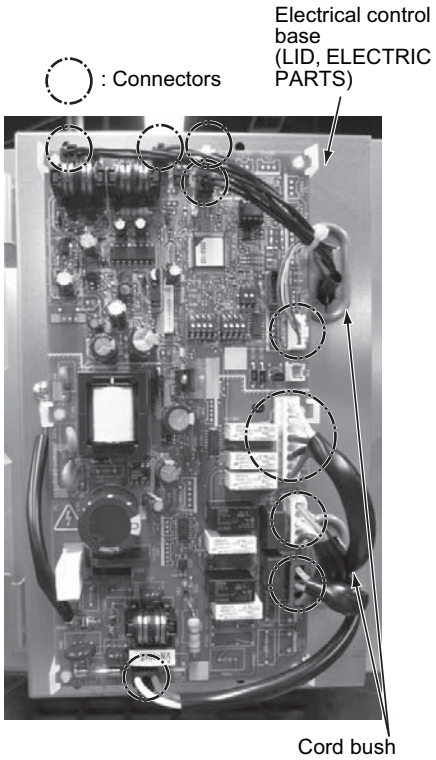
		25. Remove the two tapping screws (SCREW, TAPPING), then remove the electrical control base (LID, ELECTRIC PARTS).	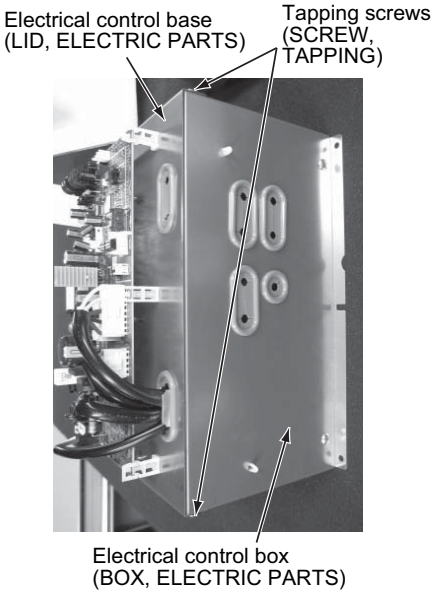

No.	Component	Procedure	Note
21	PC board (PC BOARD) ***5***, ***24***, ***26***	***26.***Remove the screws (M4×6) that fix the earth wire. Remove the six spacers from the PC board (PC BOARD).	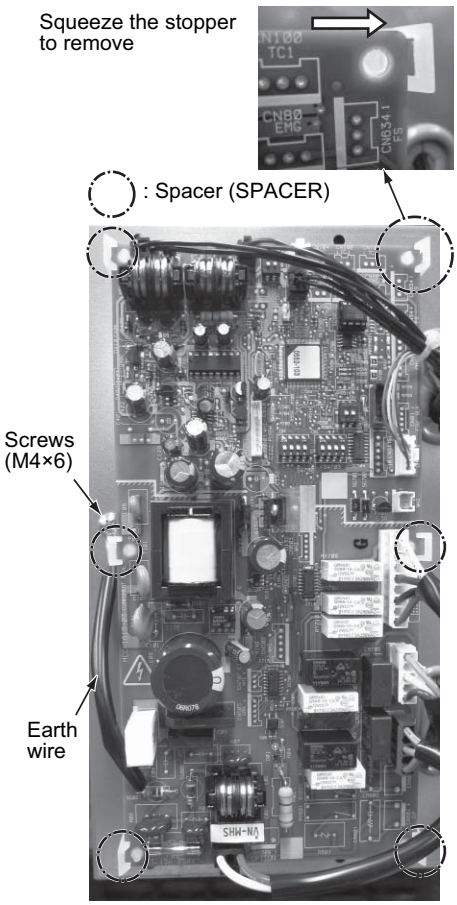
22	Spacer (SPACER) ***5***, ***24***, ***26***, ***27***	***27.***Squeeze the lock of the spacer (SPACER) to remove it from the electrical control base (LID, ELECTRIC PARTS).	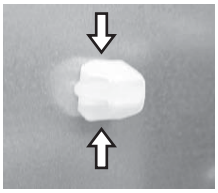
23	Power supply terminal block (TERMINAL BLOCK, 2P) ***5***, ***28***	***28.***Pull out the fastening terminals of the connectors (CONNECTOR, 1/CONNECTOR, 6/ CONNECTOR, 7). Remove the two screws that fix the power supply terminal block (TERMINAL BLOCK, 2P), then remove the power supply terminal block.	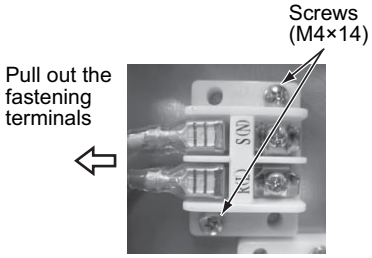
24	External terminal block (TERMINAL BLOCK, 5P) ***5***, ***29***	***29.***Pull out the fastening terminal of the connector (CONNECTOR, 5). Remove the two screws that fix the external terminal block (TERMINAL BLOCK, 5P), then remove the external terminal block.	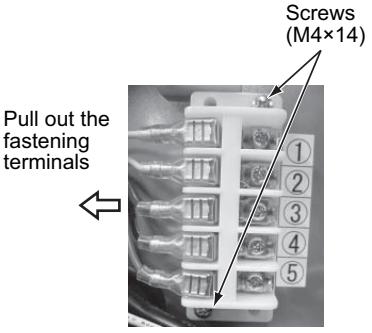

No.	Component	Procedure	Note
25	Communication wire terminal block (TERMINAL, 4P) ***5***, ***30***	***30.*** Pull out the fastening terminal of the connector (CONNECTOR, 8). Remove the two screws that fix the communication wire terminal block (TERMINAL, 4P), then remove the communication wire terminal block.	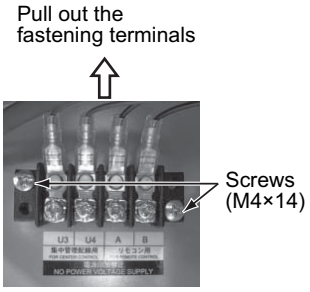
26	TRA Sensor (SENSOR, TRA) ***1***, ***2***, ***5***, ***31***, ***32***	***31.*** Release the small clamp (CLAMP) and big clamp (CLAMP) that fix the TRA sensor (SENSOR, TRA), then remove the TRA sensor.	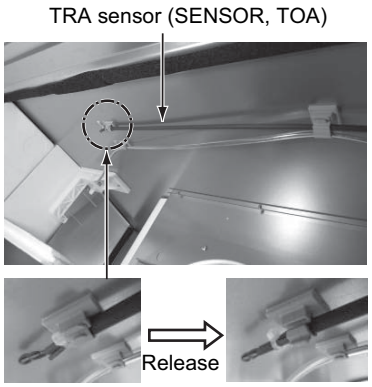
		32. Cut the cable tie, then remove the connector of the sensor (SENSOR, TRA) from the PC board (PC BOARD). **Note:** When cutting the cable tie, be careful not to cut the lead wire unintentionally. Connector of TRA sensor (SENSOR, TRA): CN105 (Brown) Connector of TOA sensor (SENSOR, TOA): CN106 (white)	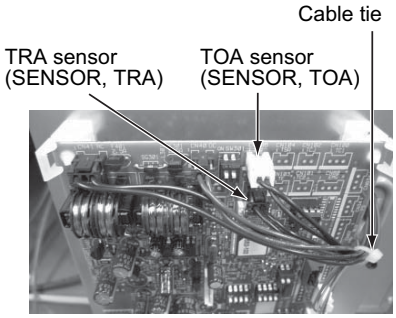
27	TOA sensor (SENSOR, TOA) ***1***, ***2***, ***5***, ***32***, ***33***	***33.*** Release the small clamp (CLAMP) and big clamp (CLAMP) that fix the TOA sensor (SENSOR, TOA), then remove the TOA sensor.	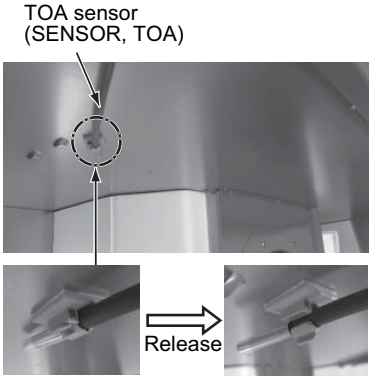

No.	Component	Procedure	Note
28	Connector (CONNECTOR, 1 - 9) ***5***, ***34***	***34.***Cut the cable tie that fixes the connector (CONNECTOR, 1 - 9), then pull out the fastening terminals of the connectors. **Note:** When cutting the cable tie, be careful not to cut the lead wire unintentionally. • Note on connecting Connect the fastening terminal firmly, and make sure the fastening terminal holds the tab terminal securely. (Do not insert the tab terminal between the fastening terminal and sleeve.) 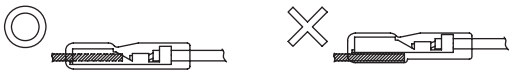 • Note on connecting Insert the connector firmly. (After inserting the connector, pull it slightly to make sure it is firmly inserted.)	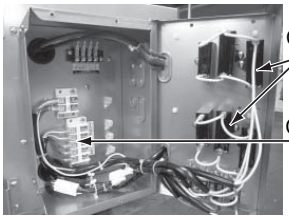 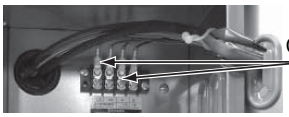 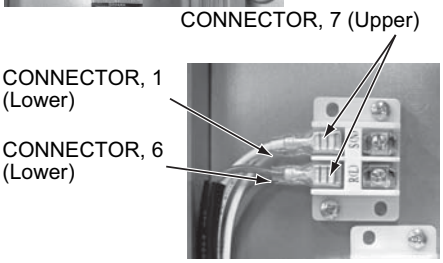 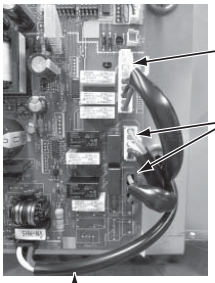 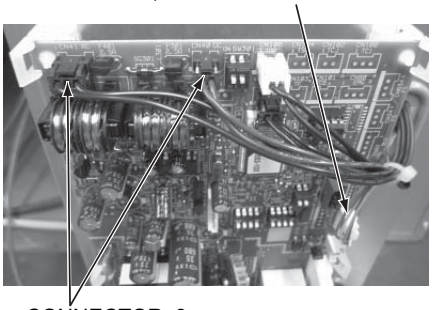
29	Connector 1 (CONNECTOR, 1) ***5***, ***6***, ***34***, ***35***, ***44***, ***45***	***35.***Pull out the fastening terminals of the power supply terminal block (TERMINAL BLOCK, 2P), relay (RELAY, LY-1F), and capacitor (CAPACITOR). Remove the connector connecting connector 1 and 2 (CONNECTOR, 1 and 2).	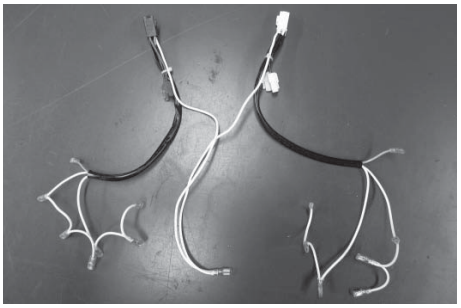
30	Connector 2 (CONNECTOR, 2) ***5***, ***34***, ***36***, ***45***	***36.***Pull out the fastening terminal of the relay (RELAY, LY-1F). Remove the connector connecting connector 1 and 2 (CONNECTOR, 1 and 2).	

No.	Component	Procedure	Note
31	Connector 3 (CONNECTOR, 3) ***5***, ***37***, ***45***	***37.***Pull out the fastening terminal of the relay (RELAY, LY-1F).	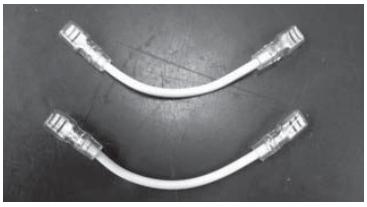
32	Connector 4 (CONNECTOR, 4) ***5***, ***34***, ***38***, ***45***	***38.***Pull out the fastening terminal of the relay (RELAY, LY-1F). Remove the connector of the PC board (PC BOARD).	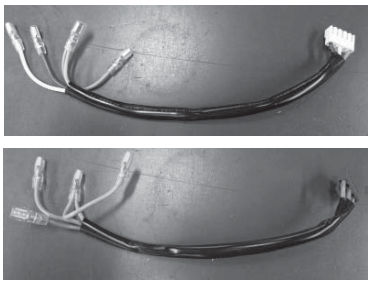
33	Connector 5 (CONNECTOR, 5) ***5***, ***29***, ***34***, ***39***	***39.***Pull out the fastening terminal of the external terminal block (TERMINAL BLOCK, 5P). Remove the connector of the PC board (PC BOARD).	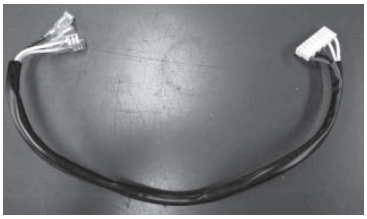
34	Connector 6 (CONNECTOR, 6) ***5***, ***28***, ***34***, ***40***, ***45***	***40.***Pull out the fastening terminal of the power supply terminal block (TERMINAL BLOCK, 2P). Pull out the fastening terminal of the relay (RELAY, LY-1F).	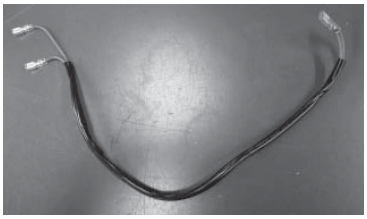
35	Connector 7 (CONNECTOR, 7) ***5***, ***28***, ***34***, ***41***, ***45***	***41.***Pull out the fastening terminal of the power supply terminal block (TERMINAL BLOCK, 2P). Remove the connector of the PC board (PC BOARD).	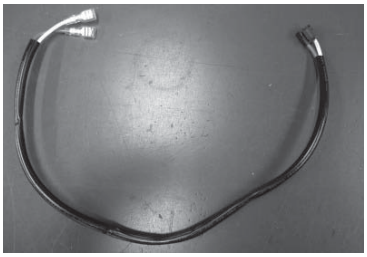
36	Connector 8 (CONNECTOR, 8) ***5***, ***30***, ***34***, ***42***	***42.***Pull out the fastening terminal of the communication wire terminal block (TERMINAL BLOCK, 4P). Remove the connector of the PC board (PC BOARD).	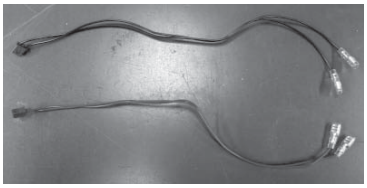
37	Connector 9 (CONNECTOR, 9) ***1***, ***2***, ***5***, ***19*** - ***21***, ***34***, ***43***	***43.***Remove the connector of the louver motor (MOTOR, LOUVER). Remove the connector of the PC board (PC BOARD).	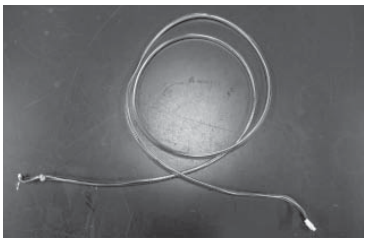

No.	Component	Procedure	Note
38	Capacitor (CAPACITOR) ***5***, ***44***	***44.*** Pull out the fastening terminal of the connector (CONNECTOR, 1). Remove the screw (M4×14) that fixes the capacitor (CAPACITOR), then remove the capacitor.	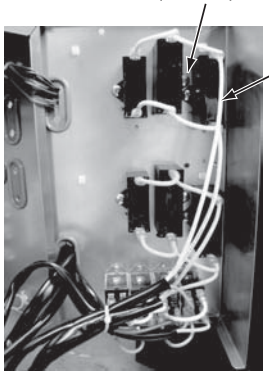
39	Relay (RELAY, LY-1F) ***5***, ***45***	***45.*** Pull out the fastening terminals of the connectors (CONNECTOR, 1 -4, 6). Remove the two screws (M3×6) that fixes the relay (RELAY, LY-1F), then remove the relay.	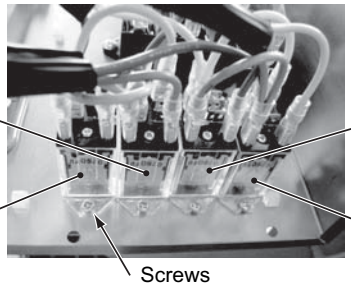

Terminal arrangement/
Internal connections
(Bottom view)

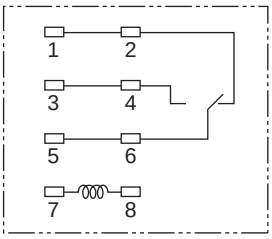

Relay terminal layout

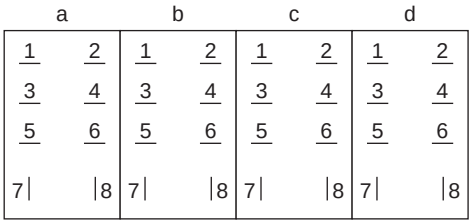

For exhaust motor	Relay a (4321F)	1	Empty	2	Empty
		3	CONNECTOR, 2 (Red)	4	Empty
		5	CONNECTOR, 3 (White)	6	Empty
		7	CONNECTOR, 4 (Light blue)	8	CONNECTOR, 4 (Brown)
	Relay b (4322F)	1	Empty	2	CONNECTOR, 3 (White)
		3	CONNECTOR, 1 (Brown)	4	Empty
		5	CONNECTOR, 6 (Red)	6	Empty
		7	CONNECTOR, 4 (Light blue)	8	CONNECTOR, 4 (Pink)
For supply motor	Relay c (4311F)	1	Empty	2	Empty
		3	CONNECTOR, 2 (White)	4	Empty
		5	CONNECTOR, 3 (White)	6	Empty
		7	CONNECTOR, 4 (Gray)	8	CONNECTOR, 4 (Blue)
	Relay d (4312F)	1	Empty	2	CONNECTOR, 3 (White)
		3	CONNECTOR, 1 (Orange)	4	Empty
		5	CONNECTOR, 6 (Red)	6	Empty
		7	CONNECTOR, 4 (Gray)	8	CONNECTOR, 4 (Yellow)

11 Owner's Manual

Original instruction

Thank you very much for purchasing TOSHIBA Air to Air Heat Exchanger.
Please read this owner's manual carefully before using your Air to Air Heat Exchanger.
- Obtain the "Owner's manual" and "Installation manual" from constructor (or dealer).

Request to constructor or dealer
- Please clearly explain the contents of the Owner's manual and hand over it.

This appliance is not intended for use by person (including children) with reduced physical, sensory or mental capabilities, or lack of experience and knowledge, unless they have been given supervision or instruction concerning use of the appliance by a person responsible for their safety.

Contents

Please read carefully through these instructions that contain important information which complies with the “Machinery” Directive (Directive 2006/42/EC), and understand them.

Generic Denomination: Air to Air Heat Exchanger

Definition of Qualified Installer or Qualified Service Person

The Air to Air Heat Exchanger must be installed, maintained, repaired and removed by a qualified installer or qualified service person. When any of these jobs is to be done, ask a qualified installer or qualified service person to do them for you.
A qualified installer or qualified service person is an agent who has the qualifications and knowledge described in the table below.

Agent	Qualifications and knowledge which the agent must have
• Qualified installer	• The qualified installer is a person who installs, maintains, relocates and removes the Air to Air Heat Exchangers made by Toshiba Carrier Corporation. He or she has been trained to install, maintain, relocate and remove the Air to Air Heat Exchangers made by Toshiba Carrier Corporation or, alternatively, he or she has been instructed in such operations by an individual or individuals who have been trained and is thus thoroughly acquainted with the knowledge related to these operations. • The qualified installer who is allowed to do the electrical work involved in installation, relocation and removal has the qualifications pertaining to this electrical work as stipulated by the local laws and regulations, and he or she is a person who has been trained in matters relating to electrical work on the Air to Air Heat Exchangers made by Toshiba Carrier Corporation or, alternatively, he or she has been instructed in such matters by an individual or individuals who have been trained and is thus thoroughly acquainted with the knowledge related to this work. • The qualified installer who is allowed to work at heights has been trained in matters relating to working at heights with the Air to Air Heat Exchangers made by Toshiba Carrier Corporation or, alternatively, he or she has been instructed in such matters by an individual or individuals who have been trained and is thus thoroughly acquainted with the knowledge related to this work.
• Qualified service person	• The qualified service person is a person who installs, repairs, maintains, relocates and removes the Air to Air Heat Exchangers made by Toshiba Carrier Corporation. He or she has been trained to install, repair, maintain, relocate and remove the Air to Air Heat Exchangers made by Toshiba Carrier Corporation or, alternatively, he or she has been instructed in such operations by an individual or individuals who have been trained and is thus thoroughly acquainted with the knowledge related to these operations. • The qualified service person who is allowed to do the electrical work involved in installation, repair, relocation and removal has the qualifications pertaining to this electrical work as stipulated by the local laws and regulations, and he or she is a person who has been trained in matters relating to electrical work on the Air to Air Heat Exchangers made by Toshiba Carrier Corporation or, alternatively, he or she has been instructed in such matters by an individual or individuals who have been trained and is thus thoroughly acquainted with the knowledge related to this work. • The qualified service person who is allowed to work at heights has been trained in matters relating to working at heights with the Air to Air Heat Exchangers made by Toshiba Carrier Corporation or, alternatively, he or she has been instructed in such matters by an individual or individuals who have been trained and is thus thoroughly acquainted with the knowledge related to this work.

■ Warning indications on the Air to Air Heat Exchanger

Warning indication	Description
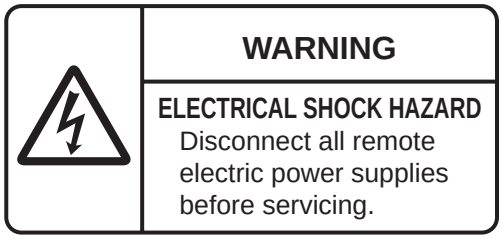	**WARNING** **ELECTRICAL SHOCK HAZARD** Disconnect all remote electric power supplies before servicing.
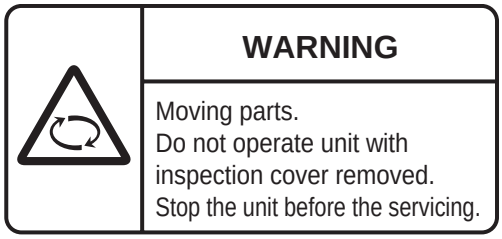	**WARNING** Moving parts. Do not operate unit with inspection cover removed. Stop the unit before the servicing.
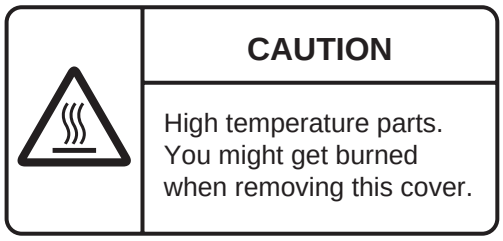	**CAUTION** High temperature parts. You might get burned when removing this cover.

1 Precautions for Safety

⚠ WARNING

General

- Carefully read Owner's Manual before starting the Air to Air Heat Exchanger. There are many important things to keep in mind for daily operation.
- Ask for installation to be performed by the dealer or a professional. Only a qualified installer (*1) is able to install an Air to Air Heat Exchanger. If a non-qualified person installs an Air to Air Heat Exchanger, it may result in problems such as fire, electric shock, injury, water leakage, noise and vibration.

Transportation and storage

- When transporting the Air to Air Heat Exchanger, wear shoes with protective toe caps, protective gloves, and other protective clothing.
- When transporting the Air to Air Heat Exchanger, do not take hold of the bands around the packing carton. You may injure yourself if the bands should break.
- When stacking the packing cartons for storage or transportation, heed the precautions written on the packing cartons. Failure to heed the precautions may cause the stack to collapse.
- The Air to Air Heat Exchanger should be transported in stable condition. If any part of the product broken, contact your dealer.
- Use a hand track or forklift to carry the unit. When carrying it by human power, have four persons or more; otherwise, you may strain your back.

Installation

- Only a qualified installer(*1) or qualified service person(*1) is allowed to carry out the electrical work of the Air to Air Heat Exchanger. Under no circumstances must this work be done by an unqualified individual since failure to carry out the work properly may result in electric shocks and/or electrical leaks.
- After the installation work has been completed, have the installer explain about the circuit breaker positions. In the event that trouble has occurred in the Air to Air Heat Exchanger, set the circuit breaker to the OFF position, and contact a service person.
- Do not install the Air to Air Heat Exchanger in a location that may be subject to a risk of expire to a combustible gas. If a combustible gas leaks and becomes concentrated around the unit, a fire may occur.
- Use the company-specified products for the separately purchased parts. Use of non-specified products may result in fire, electric shock, water leakage or other trouble. Have the installation performed by a professional.
- Confirm that earthing is performed correctly.

Operation

- Before opening the electrical control cover or inspection cover of the Air to Air Heat Exchanger, set the circuit breaker to the OFF position. Failure to set the circuit breaker to the OFF position may result in electric shocks through contact with the interior parts. Only a qualified installer(*1) or qualified service person(*1) is allowed to remove the electrical control cover or inspection cover of the Air to Air Heat Exchanger and do the work required.
- Inside the Air to Air Heat Exchanger are high-voltage areas and rotating parts. Due to the danger of electric shocks or of your fingers or physical objects becoming trapped in the rotating parts, do not remove the electrical control cover or inspection cover of the Air to Air Heat Exchanger. When work involving the removal of these parts is required, contact a qualified installer or a qualified service person.
- Do not move or repair any unit by yourself. Since there is high voltage inside the unit, you may get electric shock when removing the cover and main unit.
- Use of a stand more than 50 cm high to clean the filter or heat exchange element of the Air to Air Heat Exchanger or to carry out other such jobs constitutes working at heights. Due to the danger of falling off the stand and injuring yourself while working at heights, this kind of work should not be done by unqualified individuals. When this kind of work must be carried out, do not do it yourself but ask a qualified installer or a qualified service person to do it for you.
- Do not place any combustion appliance in a place where it is directly exposed to the wind of Air to Air Heat Exchanger, otherwise it may cause imperfect combustion.
- Do not insert your finger or a stick into the air intake or outlet.
  Doing so may result injury as the fan is rotating at high speed inside the unit.

Repairs

- When you have noticed that some kind of trouble (such as when an error display has appeared, there is a smell of burning, abnormal sounds are heard, water is leaking) has occurred in the Air to Air Heat Exchanger, do not touch the Air to Air Heat Exchanger yourself but set the circuit breaker to the OFF position, and contact a qualified service person. Take steps to ensure that the power will not be turned on (by marking "out of service" near the circuit breaker, for instance) until qualified service person arrives. Continuing to use the Air to Air Heat Exchanger in the trouble status may cause mechanical problems to escalate or result in electric shocks or other trouble.

- If there is a danger of the Air to Air Heat Exchanger's falling, do not approach the Air to Air Heat Exchanger but set the circuit breaker to the OFF position, and contact a qualified installer or a qualified service person to refit the unit. Do not set the circuit breaker to the ON position until the unit has been refitted.
- Do not modify the products. Do not also disassemble or modify the parts. It may cause a fire, electric shock or injury.

Relocation

- When the Air to Air Heat Exchanger is to be relocated, do not relocate it yourself but contact a qualified installer or a qualified service person. Failure to relocate the Air to Air Heat Exchanger properly may result in electric shocks and/or a fire.

(*1) Refer to the "Definition of Qualified Installer or Qualified Service Person."

⚠ CAUTION

To Disconnect the Appliance from the Mains Supply

- Means for disconnection having a contact separation in all poles at least 3 mm must be incorporated in the fixed wiring in accordance with the wiring rules.

The Installation Fuse (All Types Can Be Used) Must Be Used for the Power Supply Line of This Air to Air Heat Exchanger.

Cautions about Installation (confirm the following cautions.)

- Connect the Air to Air Heat Exchanger to an exclusive power supply of the rated voltage, otherwise the unit may break down or cause a fire.

Cautions about Operation

- Do not use this Air to Air Heat Exchanger for special purpose such as preserving food, precision instruments, art objects, breeding animals, car, vessel, etc.
- Do not touch any switches with wet finger, otherwise you may get an electric shock.
- If the Air to Air Heat Exchanger will not be used for a considerably long time, turn off the main switch or the circuit breaker, for safety.
- Prevent any liquid from falling into the remote controller. Do not spill juice, water or any kind of liquid.
- Do not pour or spray water or detergent on the electric parts.
  Doing so may cause electric leakage and result in a fire, electric shocks and/or injury.
- Do not install the unit and inside air intake in a place such as a machine factory, chemical plant, or research institute, where acids, alkaline, organic solvents, or coating materials are handled and toxic gases and/or corrosive gases may be produced.
  Otherwise, gas poisoning may occur and/or the inside of the unit may be eroded or deteriorated. The deterioration and erosion may result in a fire.
- Do not use "Bypass mode" when heating the room in winter.
  Water condensed on the unit may drip onto the ceiling board and may soil the ceiling.
- Do not use the unit in a place where it is hot (40°C or higher) or where much oily smoke is produced, and do not directly expose the unit to flame.
  Doing so may result in a fire.
- Do not expose animals or plants to the wind from the unit.
  Doing so may harm the animal or plant.
- Do not use a flammable spray near the unit or inside air intake.
  Doing so may result in a fire.

■ Disposal

Dispose of Air to Air Heat Exchanger in accordance with the 2002/96/EC Directive WEEE (Waste Electrical and Electronic Equipment).

■ Information on the transportation, handling and storage of the carton

Examples of indication on the carton

Symbol	Description	Symbol	Description
	Keep dry		Do not drop
	Do not lay down	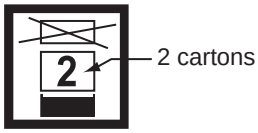	Stacking height (3 cartons can be stacked in this case)
	This side up		Do not step
	Handle with care		Weight
	Do not roll		Do not clamp

Other cautions	Description
	**CAUTION** Injury possibility. Don't handle with packing band, or may get injured in case of broken band.
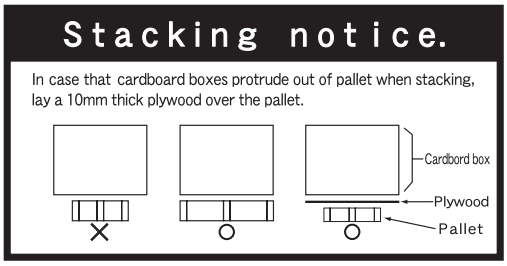	**Stacking notice.** In case that cardboard boxes protrude out of pallet when stacking. Lay a 10 mm thick plywood over the pallet.

2 Features

■ Main features

◆ Power saving ventilation

The cost of cooling and heating is reduced thanks to the unit efficiently retrieving thermal energy (outdoor air load) which has been lost during ordinary ventilation.

◆ Space saving

Significant reduction of outdoor air load and the ability to retrieve thermal energy enable the production of smaller air conditioning devices.

◆ Humidity control

When cooling, highly humid outdoor air is conditioned to near the humidity of the dehumidified (cooled) indoor air before being supplied.
When heating, moisture from the indoor air is transferred to the dry outdoor air before the outdoor air is supplied.

◆ Comfortable ventilation

Ventilation without big changes in temperature is realized.
In addition, stable ventilation is possible even in an air tight room due to simultaneous air intake and expulsion.

◆ Sound insulation

Air trunks and heat exchange elements provide sound insulation.
They reduce the incoming of outdoor noise and the outward flow of sounds indoor and help keep the office or shop, and their surroundings quiet.

■ About ventilation modes

The unit has three ventilation modes.

- Heat exchange mode
  Exchanging heat between the outdoor and indoor air and making the temperature and humidity of the outdoor air closer to those of the indoor air before supplying it.
- Bypass mode
  Outdoor air is taken into a room as it is. This mode is mainly used in spring and summer.
- Automatic mode

1. For an Air to Air Heat Exchanger system
   The heat exchange mode and the bypass mode are automatically switched between following the information from the indoor and outdoor temperature sensors in the unit.
2. For an Air to Air Heat Exchanger system linked with air conditioners
   The heat exchange mode and the bypass mode are automatically switched between depending on the operation status of the air conditioner (cooling, heating, dry, fan, or temperature setting) and the information from the indoor and outdoor temperature sensors in the unit.

⚠ CAUTION

If the outdoor temperature becomes about to 15°C or less in [Automatic mode] or [Bypass mode], the system will automatically start to run in [Heat exchange mode] regardless of the mode setting to prevent condensation in the Air to Air Heat Exchanger.
* The indication of the ventilation mode setting does not change.

3 Standard Installation Example

■ Concealed microcomputer control type

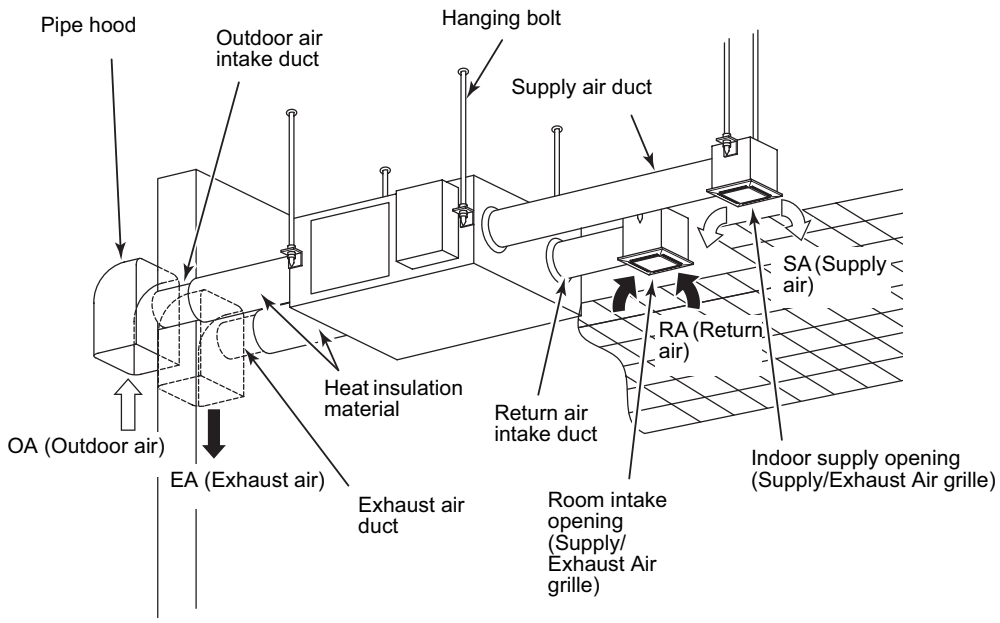

NOTE

- The printed indications on the unit become upside-down when the unit is installed upside-down.

4 System Configuration

The control method of this product differs depending on the system configuration. Operate it following the methods explained in the system configuration examples below.

- For the actual system configuration, ask your dealer or the installer of the product for information.
- Refer also to the installation manuals and owner's manuals of the remote controllers.
- If you use the central remote controller, refer also to its installation manual and owner's Manual.

System example	Operation	Cautions
A. Air to Air Heat Exchanger system 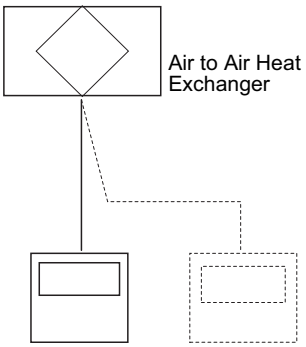 	• Using the remote controller for the Air to Air Heat Exchanger NRC-01HE, you can start and stop the unit, control the Ventilation fan speed, and select the ventilation mode. * The remote controllers for the air conditioner RBC-AMT32E are not compatible with the Air to Air Heat Exchanger system. Only ON/OFF operation is available for RBC-AMS41E. For operation details using the remote controller for the Air to Air Heat Exchanger NRC-01HE, see page 79 “6 How to Use”.	If two remote controllers are used, the latter operation overrides the former and their indications always reflect the result of the latter operation.
B. Air to Air Heat Exchanger system linked with air conditioners 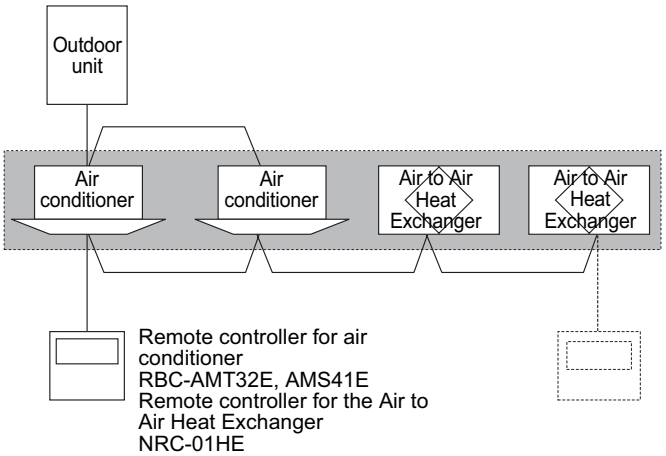 	• The remote controller for the air conditioner or the Air to Air Heat Exchanger can be used to start/stop the whole system. • The remote controller for the air conditioner or the Air to Air Heat Exchanger can be used to start/stop the Air to Air Heat Exchanger separately. * However, setting modifications are required for separate control. Contact your dealer for more information. • The remote controller for the Air to Air Heat Exchanger NRC-01HE can be used to control the Ventilation fan speed and ventilation mode of the Air to Air Heat Exchanger. • The remote controller for air conditioner RBC-AMT32E, AMS41E cannot be used to control the Ventilation fan speed or ventilation mode of the Air to Air Heat Exchanger. For operation details using the remote controller for the Air to Air Heat Exchanger NRC-01HE, see page 79 “6 How to Use”.	If two remote controllers are used, the latter operation overrides the former and their indications always reflect the result of the latter operation.

System example	Operation	Cautions
C. Central control system (When controlling the air conditioner group and the Air to Air Heat Exchanger group separately) 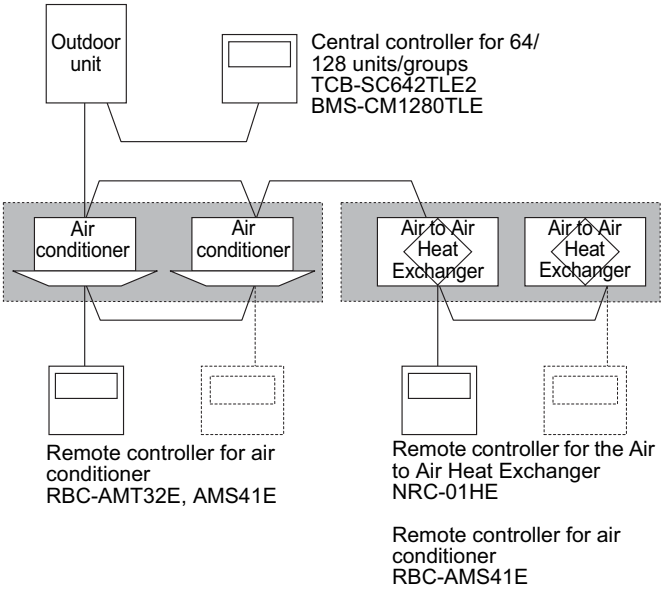 	• The central controller can be used to start/stop the whole system and separately start/stop groups of air conditioners and the Air to Air Heat Exchangers. (In this system, the air conditioners and the Air to Air Heat Exchangers are not linked in operation.) • The central controller cannot be used to control the Ventilation fan speed or ventilation mode of the Air to Air Heat Exchanger. • If the remote controller for the Air to Air Heat Exchanger NRC-01HE has been installed, you can start and stop the unit, control the Ventilation fan speed, and select the ventilation mode with the remote controller. * The remote controllers for the air conditioner RBC-AMT32E are not compatible with the Air to Air Heat Exchanger system. Only ON/OFF operation is available for RBC-AMS41E. For operation details using the remote controller for the Air to Air Heat Exchanger NRC-01HE, see page 79 “6 How to Use”.	If three control devices are used; the central controller and the remote controllers for the Air to Air Heat Exchanger and the air conditioner, the latter operation overrides the former regardless of which device is used.
D. Central control system (When controlling the air conditioners and the Air to Air Heat Exchangers together) 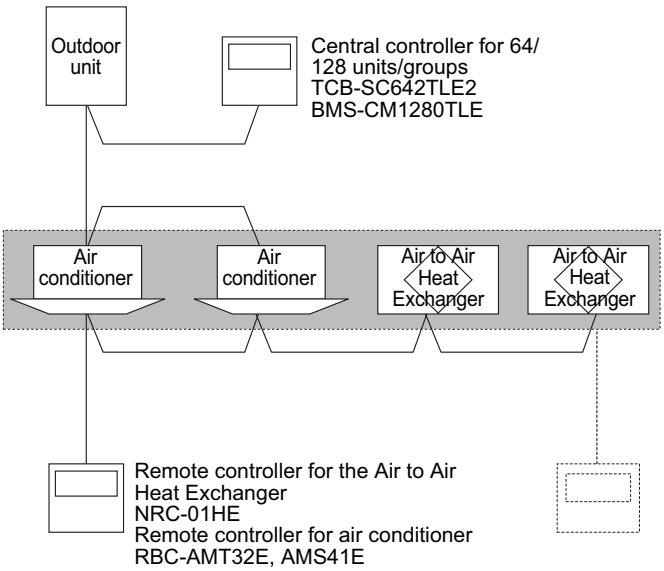 	• The central controller can be used to start/stop the whole system. It can also be used to start/stop the Air to Air Heat Exchanger separately. * However, setting modifications are required for separate control. Contact your dealer for more information. • The central controller cannot be used to control the Ventilation fan speed or ventilation mode of the Air to Air Heat Exchanger. • If the remote controller for the Air to Air Heat Exchanger NRC-01HE has been installed, you can control the Ventilation fan speed and ventilation mode of the Air to Air Heat Exchanger with the remote controller. • The remote controller for air conditioner RBC-AMT32E, AMS41E cannot be used to control the Ventilation fan speed and ventilation mode of the Air to Air Heat Exchanger. For operation details using the remote controller for the Air to Air Heat Exchanger NRC-01HE, see page 79 “6 How to Use”.	

NOTE

The heat exchange element may smell during the initial period of use. However, this is not a malfunction and the smell is harmless.

5 Part Names and Functions

■ Concealed microcomputer control type (main unit)

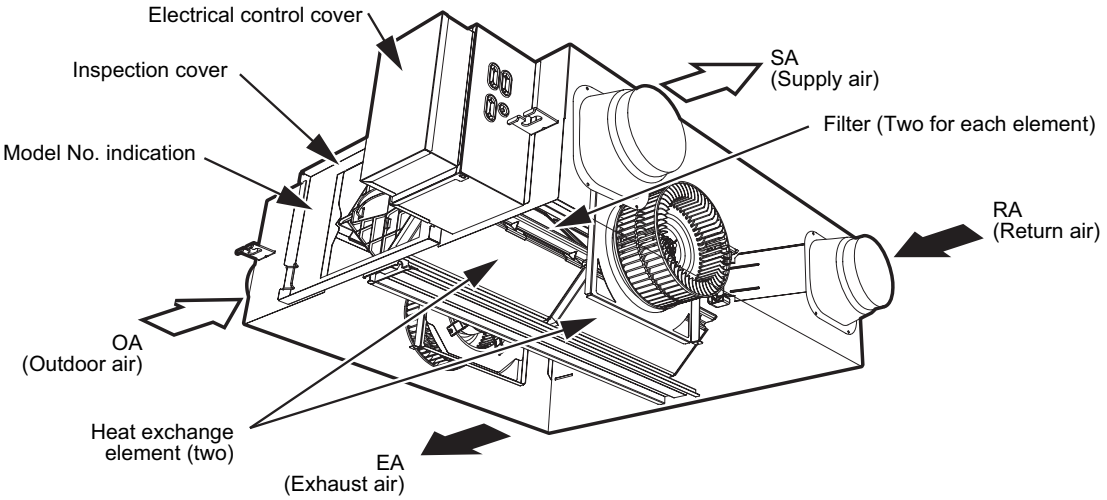

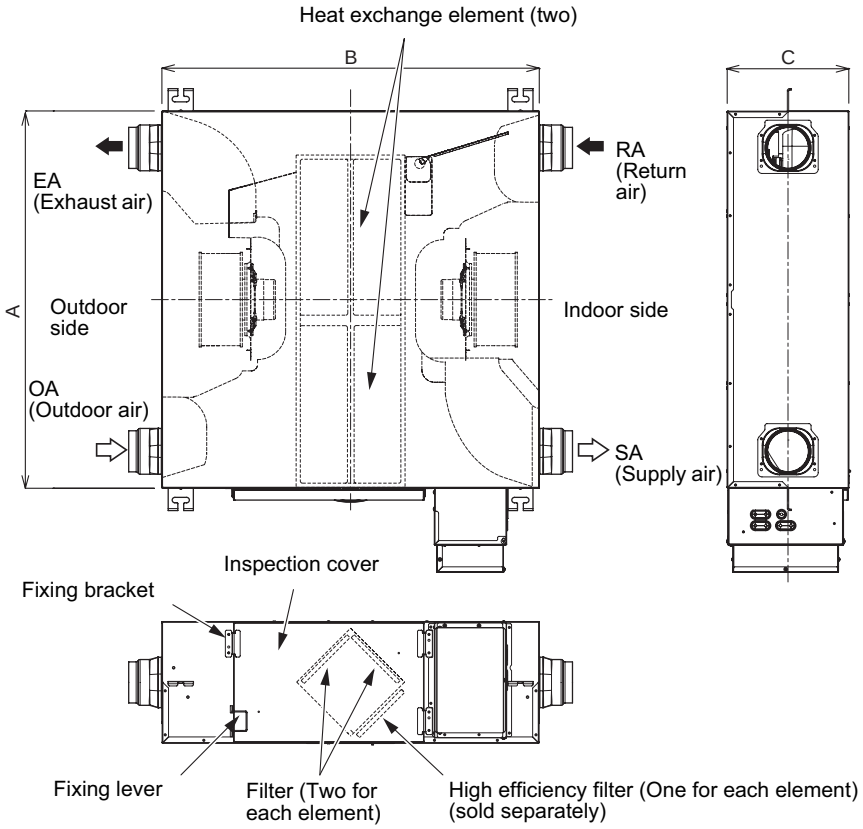

Unit: mm

Model	A	B	C	Model	A	B	C
VN-M150HE	900	900	290	VN-M650HE	1140	1140	350
VN-M250HE	900	900	290	VN-M800HE	1189	1189	400
VN-M350HE	900	900	290	VN-M1000HE	1189	1189	400
VN-M500HE	1140	1140	350				

Dimensions of hanging parts are not included.

■ Remote controller for the Air to Air Heat Exchanger NRC-01HE

◆ Operation section

- One of these remote controllers can be used to control both indoor air conditioner units and Air to Air Heat Exchangers (up to 8 units in total).
- After setting the operation conditions, you can use the units by just pressing the ON/OFF button.
- Functions concerning controlling the Air to Air Heat Exchanger are explained here. For controlling an air conditioner, refer to the owner's manuals supplied with the air conditioner.

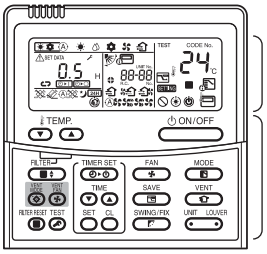

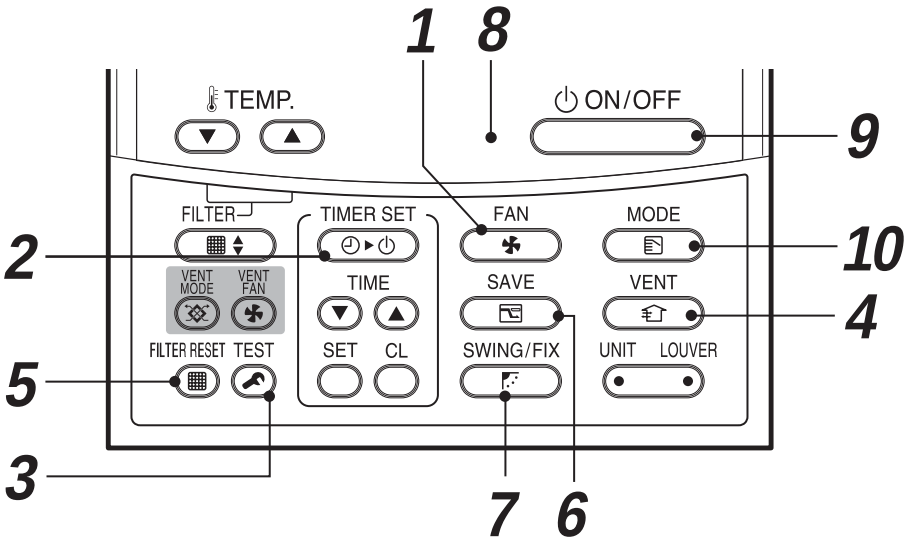

1 FAN **button (Fan speed select button) (*1)**
Selects the desired Fan speed.

2 TIMER SET **button (Timer set button)**
Used for timer setting.

3 TEST **button (Test button)**
Used for service.
Do not use this button in everyday operations.

4 VENT **button (Ventilation button)**
This button is used when the Air to Air Heat Exchanger is in a system linked with air conditioners. Push the VENT button to turn on/off the Air to Air Heat Exchanger. Turning on/off the air conditioner also turn on/off the Air to Air Heat Exchanger.
* No Air to Air Heat Exchanger is connected or separate operation of the Air to Air Heat Exchanger is not set, if "⃠" appears on the remote controller display after pushing the VENT button.

5 FILTER RESET **button (Filter reset button)**
Resets "▦ FILTER" indication after cleaning.

6 SAVE **button (Power save operation) (*1)**
Use to initiate power saving mode.

7 SWING/FIX **button (Swing/Louver direction button) (*1)**
Use to select automatic swing or fixed louver position.
* Not available for concealed duct, slim duct, floor concealed and floor standing cabinet fresh air intake types.

8 Operation lamp
Lights up during operation.
Blinks when an error occurs or the protective device activates.

9 ON / OFF **button**
Turns on the unit when pressed, and turns it off when pressed again.

10 MODE **button (Operation mode select button) (*1)**
Selects desired operation mode.

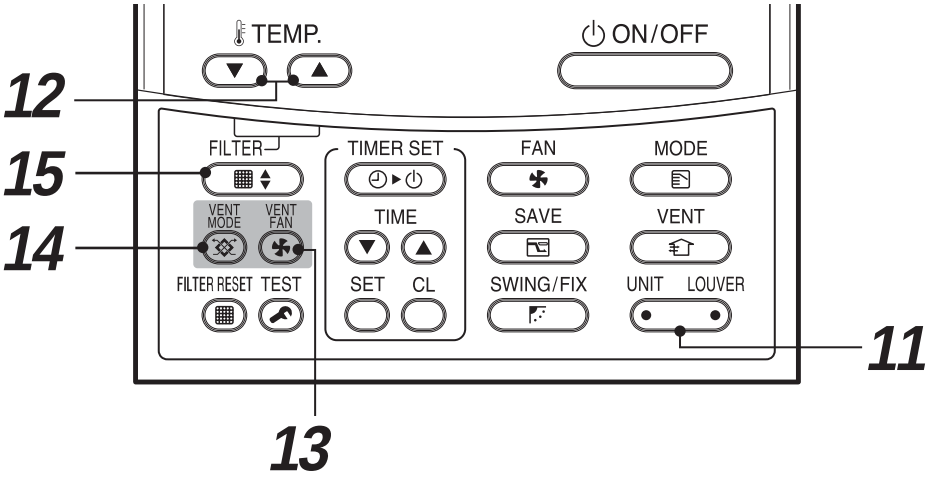

11 UNIT LOUVER **button (Unit/Louver select button)**

Used for selecting a unit while changing settings if the remote controls two or more units.

UNIT button:

If two or more indoor units are controlled by one remote controller, use this button to select a unit to adjust its air blow direction.

LOUVER button (*1): (4-way cassette type 2H series only)

Selects a louver to control when adjusting the louver lock setting or wind direction setting separately for each louver.

12 TEMP. **button (Temperature set button)**

Adjusts the set temperature.

Select the desired set point by pushing TEMP. ▼ or TEMP. ▲

13 VENT FAN **button (Ventilation fan speed button)**

Used to select the ventilation fan speed.

You can stop 24-hour ventilation temporarily by pressing and holding the button for 4 seconds while 24H is displayed.

14 VENT MODE **button (Ventilation mode button)**

Used to select a ventilation mode.

15 FILTER **button (Filter elevating button) (*1)**

* This function is not available.

OPTION:

Remote controller sensor (*1)

Normally the temperature sensor of the indoor unit senses the temperature. The temperature around the remote controller can also be sensed. For details, contact your dealer.

* Do not use the function when the air conditioner is controlled in a group.

(*1):

This function is not available for Air to Air Heat Exchanger.

"⃠" will be displayed for few seconds when the unit is running in a system equipped with only the Air to Air Heat Exchanger.

◆Display section

All indicators are displayed on the display example below for explanation. In reality, only the selected options will be displayed. Indications concerning controlling the Air to Air Heat Exchanger are explained here. For indications concerning an air conditioner, refer to the owner's manuals supplied with the air conditioner.

- SETTING blinks on the display of the remote controller when the power switch is turned on for the first time.
  The initial settings progress while SETTING is blinking. Start to use the remote controller after SETTING has disappeared.

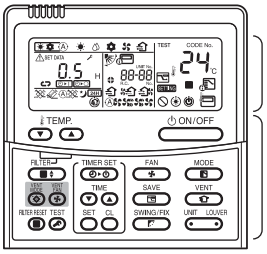

NOTE

The LCD may temporarily be blurred due to static electricity.

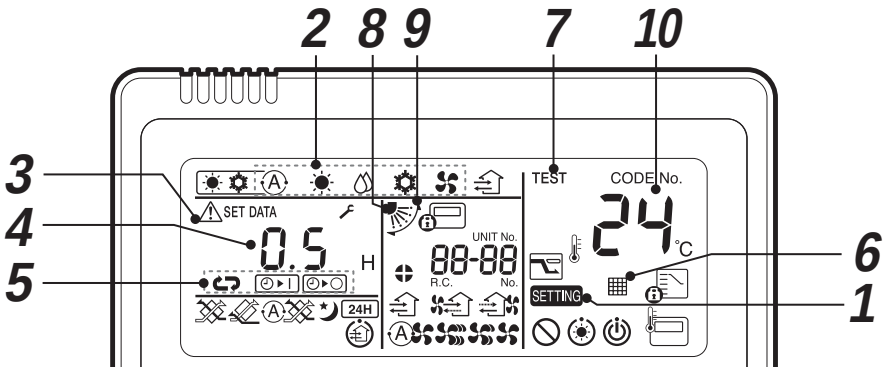

1 SETTING indicator
Displayed when setting the timer or other functions.

2 Operation mode indicator (*1)
Indicates the operation mode selected.

3 Error indicator
Displayed when the protective device activates or an error occurs.

4 Time indicator
Indicates time concerning the timer.
(Indicates a error code when an error occurs.)

5 Timer mode indicator
Each time you press the TIMER SET button, the indication changes as follows: , , , and no timer indication.

6 Filter indicator
Reminder to clean the air filter.

7 Test run indicator
Displayed during a test run.

8 Louver position display (*1)
Indicates the louver position.
* Only for 4-way cassette, 1-way cassette, 2-way cassette, under ceiling types

9 Swing indicator (*1)
Displayed during up/down movement of the louver.

10 Set temperature display (*1)
The selected set temperature is displayed.

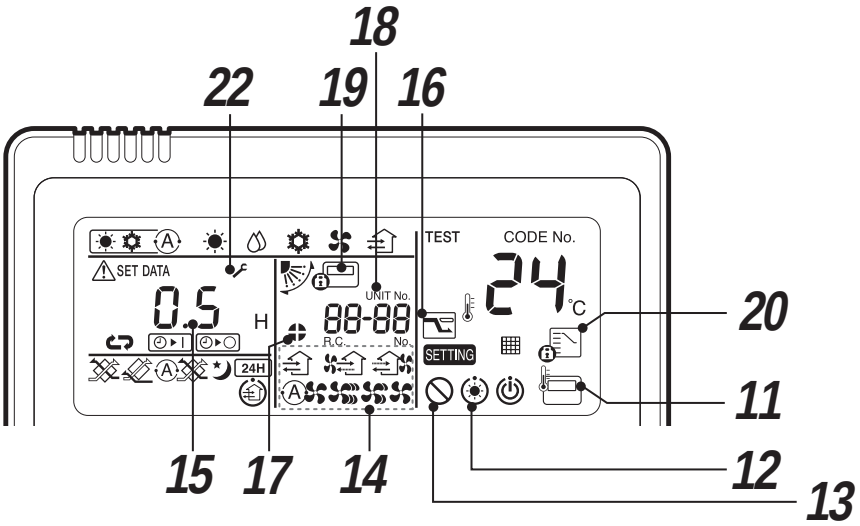

11 Remote controller sensor indicator (*1)
Displayed when the remote controller sensor is used.

12 Pre-heat indicator (*1)
Displayed when the heating mode is energized or defrost cycle is initiated.
While this indication is displayed, the indoor fan stops or operate in fan mode.

13 No function indicator
Displayed when the function requested is not available on that model.

14 Fan speed indicator (*1)
Indicates the selected fan speed:

(Auto)
(High)
(Medium)
(Low)

15 Louver Number display (*1)
(example:01, 02, 03, 04)

16 Power saving mode display (*1)
Displayed during capacity saving mode.

17 Louver lock indicator (*1)
Displayed when a louver is locked. (4-way cassette type only)

18 UNIT No. indicator
The number of the Air to Air Heat Exchanger selected using the UNIT button or that of the unit in which an error has occurred.

19 Central control indicator
Displayed when a central control device such as a central controller is also used. If the central control device prohibits the use of local remote controllers, blinks when any of the ON / OFF, MODE or TEMP. buttons are pressed and the operation is rejected.
The items controllable with the remote differ depending on the mode of central control. Refer to the owner's manual of the central control device you are using for more information.

20 Operation mode controlled indicator (*1)
Displayed when MODE button is pushed while operation mode is fixed to cool or heat by the air conditioner administrator.

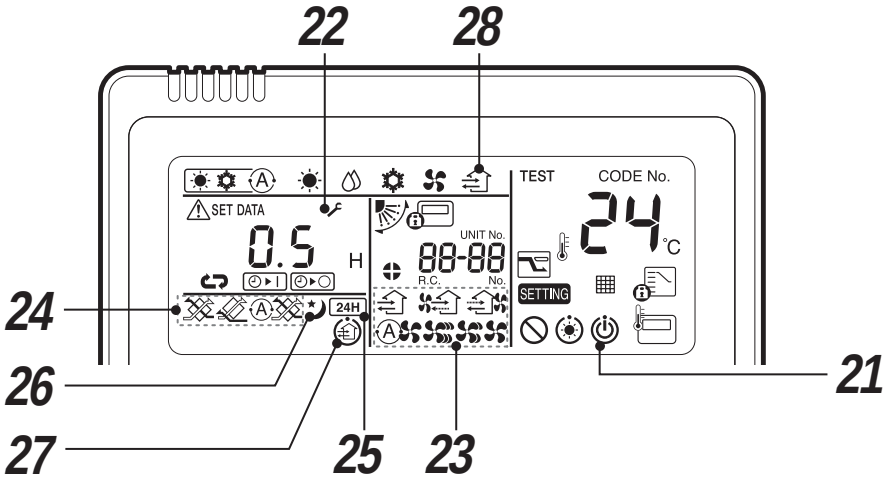

21 Operation ready display (*1)

This display appears on some models.

22 Service display

Displayed while the protective device works or a trouble occurs.

23 Ventilation fan speed indicator

Indicates the ventilation fan's speed. , , or is indicated.
When the remote is used to control air conditioners together with the Air to Air Heat Exchanger as a group, VENT FAN indicator appears (blinks) only when the button is pressed.

(High)	
(Low)	
(SA > EA)	* Displayed when the setting is activated.
(SA < EA)	

24 Ventilation mode indicator

Indicates the selected ventilation mode. , or is indicated.

(Automatic mode)	
(Heat exchange mode)	
(Bypass mode)	

25 24-hour ventilation indicator

Displayed during 24-hour ventilation.

* Displayed when the setting is activated.

26 Nighttime heat purge indicator

Displayed during the nighttime heat purge operation.

* Displayed when the setting is activated.

27 Ventilation on-standby indicator

Displayed while the Air to Air Heat Exchanger is on standby. While this indicator is displayed, the Air to Air Heat Exchanger is not in operation.

* Displayed when the setting is activated.

28 Ventilation indicator

If the remote is used to control the Air to Air Heat Exchanger in the Air to Air Heat Exchanger system linked with air conditioners, and separate operation of the unit is set to available, the indicator is displayed while the unit is running.

* The indicator is not displayed when the unit is running in a system equipped with only the Air to Air Heat Exchanger.

(*1):
Not displayed. These functions are not available for Air to Air Heat Exchanger.

6 How to Use

■ When using the remote controller for the Air to Air Heat Exchanger (NRC-01HE)

When the Air to Air Heat Exchanger is used for the first time or change the settings, operate the remote following the procedure below.
From the next time, the unit starts running following the set operation conditions by just pressing the ON / OFF button.

◆ Preparation

Turning on the circuit breaker

When turned on, the separation lines appear and SETTING blinks on the display of the remote controller.

* The remote controller will not work for about 1 minute after turning on the power. This is not a malfunction.
* If an Air to Air Heat Exchanger system linked with air conditioners is used, turn on the circuit breaker for the air conditioners too.

REQUIREMENT

- Keep the circuit breaker turned on during use.
- For an Air to Air Heat Exchanger system linked with air conditioners, when the system is used after a long period of disuse, turn on the circuit breaker of the unit and air conditioners 12 hours or more before starting operation.

■ Operations

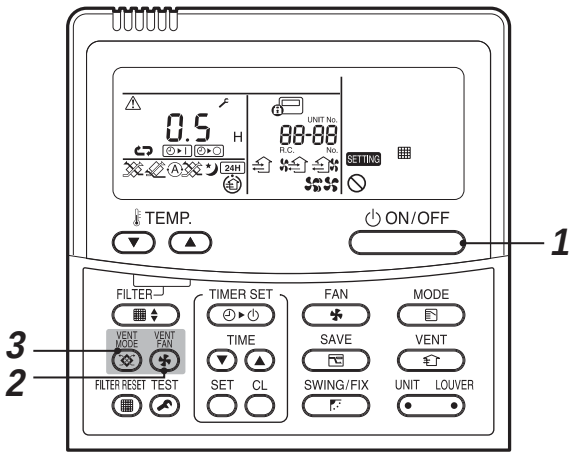

1 **Push the ON / OFF buttons to start operation.**
The operation lamp lights up.

REQUIREMENT

Operation will be started when the heat exchange ventilation is in an Air to Air Heat Exchanger system linked with air conditioners.

2 **Push the VENT FAN button to select the ventilation fan speed.**
Each time the button is pushed, the ventilation fan speed and indication changes as follows:

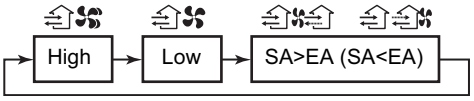

* The indications and are displayed only when the imbalanced ventilation fan speed setting is activated.

REQUIREMENT

As factory default, the imbalanced ventilation fan speed setting is deactivated only [High] and [Low] are available for selection. Consult your dealer to activate the setting.

3 **Push the VENT MODE button to select a ventilation mode.**
Each time the button is pushed, the ventilation mode and indication change as follows:

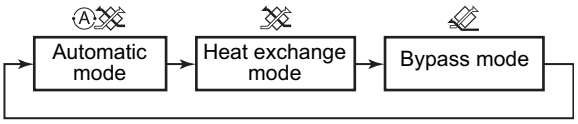

4 **Push the ON / OFF buttons to stop operation.**
The operation lamp turns off.

■ About the separate operation of the Air to Air Heat Exchanger in an Air to Air Heat Exchanger system linked with air conditioners

* The procedure below is not effective in a system equipped with the Air to Air Heat Exchanger only.

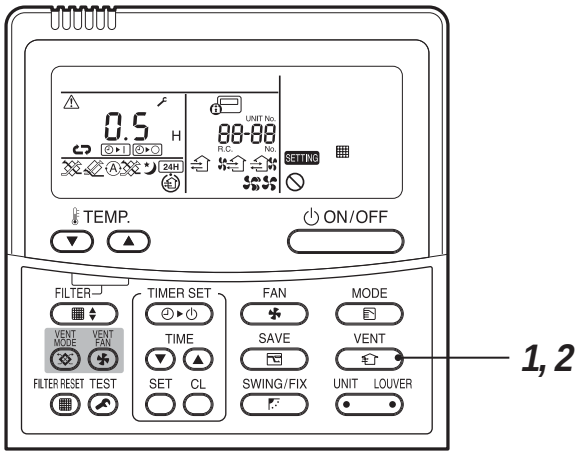

1 **Push the VENT button while the system is running.**
Only the Air to Air Heat Exchanger stops and the indicator turns off.

2 **Push the VENT button while the system is stopped.**
The indicator lights up and the Air to Air Heat Exchanger starts running separately.

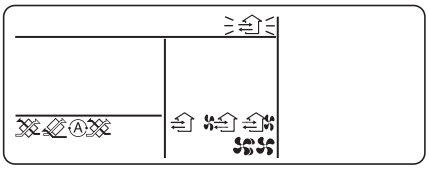

NOTE

- Normally, the Air to Air Heat Exchanger ON/OFF as the air conditioner is ON/OFF when it is in an Air to Air Heat Exchanger system linked with air conditioners.
- If "⃠" is displayed when the VENT button is pushed, certain settings need to be changed to operate the unit separately. Consult your dealer to change the settings.

■ Functions

About ventilation modes

* For details, see "About ventilation modes" on page 69.
[Heat exchange mode], [Bypass mode] or [Automatic mode] can be selected.

About imbalanced ventilation fan speed ([SA>EA]/ [SA<EA])

For normal ventilation (High or Low):
The volumes of the indoor air supply and outdoor air exhaustion are set to the same level.
For imbalanced ventilation fan speed:

- When [SA>EA] is selected: the volume of the indoor air supply is larger than that of the outdoor air exhaustion.
  (Inflow of humidity and smells from the toilet and kitchen is reduced.)
- When [SA<EA] is selected: the volume of the outdoor air exhaustion is larger than that of the indoor air supply.
  (Outflow of smells and floating bacteria into a corridor or other places is reduced.)

* Consult your dealer if the setting of the imbalanced ventilation fan speed seems incorrect.

About 24-hour ventilation

- When the 24-hour ventilation setting is active, press the ON/OFF button while the system is running and the operation lamp turns off, 24H appears on the display, and 24-hour ventilation starts.
- Press and hold the VENT FAN button for 4 seconds or more while the 24H indicator is displayed to stop 24-hour ventilation temporarily.
  The 24H indicator turns off and 24-hour ventilation stops temporarily.

NOTE

- The setting of 24-hour ventilation is "OFF" As factory default. Consult your dealer to change the setting to "ON".
- The settings of VENT FAN or VENT MODE cannot be changed during 24-hour ventilation. Their indicators are not displayed.
  * During 24-hour ventilation, the unit is running intermittently (stops for 60 minutes after running for 60 minutes) under the settings [LOW] ventilation fan speed and [Heat exchange mode].
- While 24-hour ventilation is running, the 24H indicator stays lit even during the intervals.

About nighttime heat purge operation

- **Nighttime heat purge is a function to reduce the room air conditioning load in the morning in summer by exhausting the air indoor which has become warm while the air conditioner is stopped in the night automatically in the Bypass mode.**
- **The nighttime heat purge operation functions if night purge is activated and the last operation mode of the air conditioner before stopping is , or in an Air to Air Heat Exchanger system linked with air conditioners.**
  If the ON / OFF button is pushed while the system is running, the operation lamp turns off, appears on the display, and the nighttime heat purge operation turns on-standby.
  After the operation becomes on-standby, the unit automatically starts ventilation in [Low] ventilation fan speed and [Bypass mode] when the conditions to start the nighttime heat purge operation below are fulfilled.
  The nighttime heat purge operation is paused for one hour if any of the conditions to pause the operation are detected.
  If the conditions to start the nighttime heat purge operation are fulfilled one hour after the pause, the operation will start again. If not, the operation will remain paused for one more hour.
  This cycle is repeated until the conditions to stop (end) the nighttime heat purge operation below are fulfilled.

The conditions to start the nighttime heat purge operation

The unit compares temperatures indoor and outdoor using the monitoring operation (for about 5 minutes) and will start the nighttime heat purge operation if the following conditions are fulfilled.

1. A certain amount of time has passed between the nighttime heat purge operation becoming on-standby and the monitoring operation starting. (The time is set between 1- 48 hours in 1 hour steps.)
2. The indoor temperature is 3°C or more higher than the outdoor temperature and the indoor temperature is 2°C or more higher than the temperature set for the operation.

The conditions to pause the nighttime heat purge operation (the operation pauses for one hour.)

1. The indoor temperature is the same or lower than the outdoor temperature, the indoor temperature is the same or lower than the temperature set for the operation, or one hour has passed since the nighttime heat purge operation started.

The conditions to stop (end) the nighttime heat purge operation

The nighttime heat purge operation ends and the indicator disappears if any of the following conditions are fulfilled.

1. The air conditioner or Air to Air Heat Exchanger is started.
2. 48 hours has passed since the monitoring operation started.

NOTE

- The setting of the nighttime heat purge operation is “OFF” as factory default.
  Consult your dealer to change the setting to “ON” or the setting of the time until the monitoring operation starts.
- The settings of VENT FAN or VENT MODE cannot be changed during the nighttime heat purge operation. Their indicators are not displayed.
- The indicator stays lit while the operation is on-standby or paused.
- The nighttime heat purge operation cannot be activated if 24-hour ventilation is activated.

⚠ CAUTION

The nighttime heat purge operation is not executed if the outdoor temperature becomes about 15°C or less to prevent condensation in the Air to Air Heat Exchanger, but the indicator is still lit.

7 Timer Operation

Select a timer type from the following three: (Max. 168 hours)

OFF timer	: Stops running after a specified period.
Repeat-OFF timer	: Stops running after a specified period every time the unit is used.
On timer	: Starts running after a specified period.

■ Setting the timer

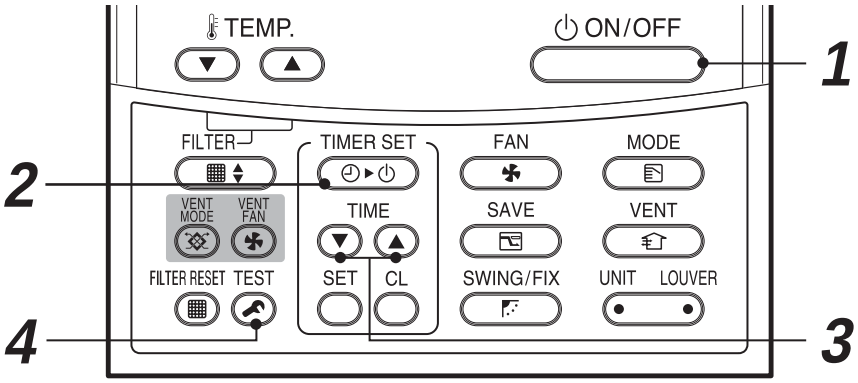

1 **Push the ON/OFF button to start operation.**
The operation lamp lights up.

2 **Push the TIMER SET button.**
Each time the button is pushed, the timer mode and indication change in the following order:

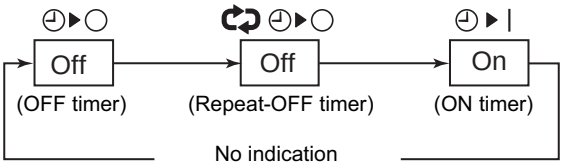

SETTING and the time indication blink.

3 **Push the TIME ▼ ▲ buttons to set the period of time until the timer actions.**

- The time setting increases in 0.5-hour (30 minute) increments each time ▲ is pushed. The setting increases in 1-hour increments if it is over 1 day (24 hours). The maximum is 7 days (168 hours).
  On the remote controller, settings between 0.5 hours and 23.5 hours (*1) are displayed as is. For settings over 24 hours (*2), the days and hours are displayed.
- The time setting decreases in 0.5-hour (30 minute) decrements (0.5 hours to 23.5 hours) or 1-hour decrements (24 hours to 168 hours) each time ▼ is pushed.

Example of indication on the remote controller

- **23.5 hours (*1)**

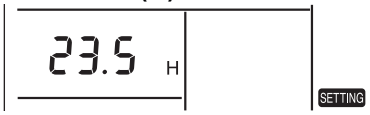

- **34 hours (*2)**

1d indicates 1 day (24 hours).
10h indicates 10 hours. (Total: 34 hours)

4 **Push the SET button.**

- SETTING disappears, the time indication is displayed, and ⊙▸| or ⊙▸○ flashes. (When using the ON timer, all indications other than the time indication and ⊙▸| turn off.)

■ Cancelling the timer

1 **Push the CL button.**
The timer indicator disappears.

NOTE

- When using the Repeat-OFF timer, pressing the ON/OFF button after the unit has been stopped by the timer starts it running again, and the unit will stop again after the specified period.
- When 24-hour ventilation or the nighttime heat purge operation is activated, the unit is running the activated operation while the unit stops following the timer setting.

8 Maintenance

■ Maintenance of the filter and heat exchange element

⚠ WARNING

Cleaning the filter and heat exchange element involves dangerous work in high places, have a qualified installer or qualified service person to do it.
Do not attempt it by yourself.

⚠ CAUTION

Do not push buttons with wet hands.
Doing so may result in electric shock.

◆ Cleaning the filters

1 **Clean the filter if " ▦ " is indicated on the remote controller.**

2 **Press the " FILTER RESET ▦ " button after cleaning the filter. The "FILTER RESET" indicator disappears.**

* If the filter or heat exchange element is clogged, the ventilation amount is reduced and ventilation effect will be deteriorated.

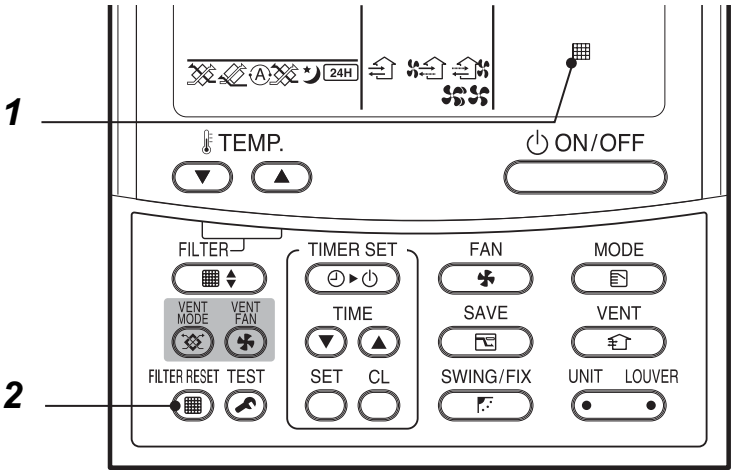

⚠ CAUTION

Cleaning remote controller

- Use a dry cloth to wipe the remote controller.
- Do not use a damp cloth on the remote controller.
- Do not use a chemically-treated duster for wiping or leave such materials on the unit for long.
  It may damage or fade the surface of the unit.
- Do not use benzine, thinner, polishing powder, or similar solvents for cleaning.
  These may cause the plastic surface to crack or deform.

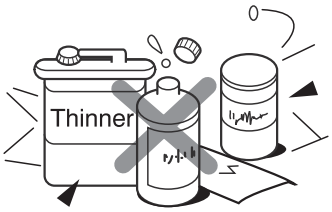

9 Specifications

■ Concealed microcomputer control type

Item		Model No. / Fan Speed		VN-M150HE	VN-M250HE	VN-M350HE	VN-M500HE	VN-M650HE	VN-M800HE	VN-M1000HE
Power Supply (V)				Single phase 220-240V~,50Hz 220V~,60Hz						
Power consumption (W)	Heat Exchange Mode	(Extra high)	50Hz	68-78	123-138	165-182	214-238	262-290	360-383	532-569
			60Hz	76	131	209	260	307	446	622
		High	50Hz	59-67	99-111	135-145	176-192	240-258	339-353	494-538
			60Hz	65	105	162	206	283	408	589
		Low	50Hz	42-47	52-59	82-88	128-142	178-191	286-300	353-370
			60Hz	45	54	94	144	206	333	411
	Bypass Mode	(Extra high)	50Hz	68-78	123-138	165-182	214-238	262-290	360-383	532-569
			60Hz	76	131	209	260	307	446	622
		High	50Hz	59-67	99-111	135-145	176-192	240-258	339-353	494-538
			60Hz	65	105	162	206	283	408	589
		Low	50Hz	42-47	52-59	82-88	128-142	178-191	286-300	353-370
			60Hz	45	54	94	144	206	333	411
Current (A)	Heat Exchange Mode	(Extra high)	50Hz	0.31-0.33	0.58-0.61	0.76-0.76	0.99-1.00	1.25-1.30	1.67-1.63	2.47-2.46
			60Hz	0.36	0.60	0.99	1.20	1.40	2.03	2.84
		High	50Hz	0.27-0.28	0.47-0.49	0.62-0.61	0.81-0.81	1.14-1.13	1.57-1.50	2.31-2.28
			60Hz	0.28	0.49	0.74	0.94	1.30	1.85	2.69
		Low	50Hz	0.20-0.20	0.25-0.26	0.38-0.37	0.59-0.60	1.25-1.30	1.31-1.27	1.62-1.57
			60Hz	0.20	0.25	0.43	0.66	0.95	1.52	1.87
	Bypass Mode	(Extra high)	50Hz	0.31-0.33	0.58-0.61	0.76-0.76	0.99-1.00	1.25-1.30	1.67-1.63	2.47-2.46
			60Hz	0.36	0.60	0.99	1.20	1.40	2.03	2.84
		High	50Hz	0.27-0.28	0.47-0.49	0.62-0.61	0.81-0.81	1.14-1.13	1.57-1.50	2.31-2.28
			60Hz	0.28	0.49	0.74	0.94	1.30	1.85	2.69
		Low	50Hz	0.20-0.20	0.25-0.26	0.38-0.37	0.59-0.60	1.25-1.30	1.31-1.27	1.62-1.57
			60Hz	0.20	0.25	0.43	0.66	0.95	1.52	1.87
Maximum running Current (A)	Heat Exchange Mode	(Extra high)	50Hz	0.32-0.33	0.61-0.65	0.81-0.82	1.19-1.23	1.37-1.41	2.15-2.23	2.89-2.94
			60Hz	0.36	0.65	1.09	1.38	1.59	2.40	3.37
		High	50Hz	0.27-0.28	0.46-0.49	0.61-0.62	0.87-0.91	1.17-1.20	1.84-1.94	2.57-2.61
			60Hz	0.30	0.47	0.73	0.96	1.34	2.01	2.95
		Low	50Hz	0.20-0.21	0.25-0.26	0.42-0.44	0.64-0.68	0.90-0.95	1.49-1.58	1.85-1.87
			60Hz	0.21	0.25	0.45	0.68	0.98	1.59	1.96
	Bypass Mode	(Extra high)	50Hz	0.32-0.33	0.61-0.65	0.81-0.82	1.19-1.23	1.37-1.41	2.15-2.23	2.89-2.94
			60Hz	0.36	0.65	1.09	1.38	1.59	2.40	3.37
		High	50Hz	0.27-0.28	0.46-0.49	0.61-0.62	0.87-0.91	1.17-1.20	1.84-1.94	2.57-2.61
			60Hz	0.30	0.47	0.73	0.96	1.34	2.01	2.95
		Low	50Hz	0.20-0.21	0.25-0.26	0.42-0.44	0.64-0.68	0.90-0.95	1.49-1.58	1.85-1.87
			60Hz	0.21	0.25	0.45	0.68	0.98	1.59	1.96

Item		Fan Speed \ Model No.		VN-M150HE	VN-M250HE	VN-M350HE	VN-M500HE	VN-M650HE	VN-M800HE	VN-M1000HE
Air Volume (m^3/h)		(Extra high)	50Hz	150	250	350	500	650	800	1000
			60Hz	150	250	350	500	650	800	1000
		High	50Hz	150	250	350	500	650	800	1000
			60Hz	150	250	350	500	650	800	1000
		Low	50Hz	110	155	210	390	520	700	755
			60Hz	110	155	210	390	520	700	755
External Static Pressure (Pa)	Heat Exchange Mode	(Extra high)	50Hz	82-102	80-98	114-125	134-150	91-107	142-158	130-150
			60Hz	99	97	167	181	134	171	185
		High	50Hz	52-78	34-65	56-83	69-99	58-82	102-132	97-122
			60Hz	59	38	33	63	68	102	120
		Low	50Hz	47-64	28-40	65-94	62-92	61-96	76-112	84-127
			60Hz	46	22	39	44	52	58	55
	Bypass Mode	(Extra high)	50Hz	82-102	80-98	114-125	134-150	91-107	142-158	130-150
			60Hz	99	97	167	181	134	171	185
		High	50Hz	52-78	34-65	56-83	69-99	58-82	102-132	97-122
			60Hz	59	38	33	63	68	102	120
		Low	50Hz	47-64	28-40	65-94	62-92	61-96	76-112	84-127
			60Hz	46	22	39	44	52	58	55
Sound pressure level (dB)	Heat Exchange Mode	(Extra high)	50Hz	26.0-28.0	29.5-30.0	34.0-35.0	32.5-34.0	34.0-36.0	37.0-38.5	39.5-40.5
			60Hz	27.5	31.5	35.5	33.5	35.5	38	41.5
		High	50Hz	24.0-25.5	25.0-27.0	30.0-32.0	29.5-31.0	33.0-34.0	35.5-37.0	38.5-40.0
			60Hz	24.5	25	29.5	29	34	35	39
		Low	50Hz	20.0-22.0	21.0-22.0	27.0-29.0	26.0-29.0	31.0-32.5	33.5-35.0	34.0-35.5
			60Hz	20	21	23.5	24.5	29.5	32.5	33.5
	Bypass Mode	(Extra high)	50Hz	26.0-28.0	29.5-30.0	34.0-35.0	32.5-34.0	34.0-36.0	37.0-38.5	39.5-40.5
			60Hz	27.5	31.5	35.5	33.5	35.5	38	41.5
		High	50Hz	24.0-25.5	25.0-27.0	30.0-32.0	29.5-31.0	33.0-34.0	35.5-37.0	38.5-40.0
			60Hz	24.5	25	29.5	29	34	35	39
		Low	50Hz	20.0-22.0	21.0-22.0	27.0-29.0	26.0-29.0	31.0-32.5	33.5-35.0	34.0-35.5
			60Hz	20	21	23.5	24.5	29.5	32.5	33.5
Temperature Exchange Efficiency (%)		(Extra high)	50Hz	81.5	78	74.5	76.5	75	76.5	73.5
			60Hz	81.5	78	74.5	76.5	75	76.5	73.5
		High	50Hz	81.5	78	74.5	76.5	75	76.5	73.5
			60Hz	81.5	78	74.5	76.5	75	76.5	73.5
		Low	50Hz	83	81.5	79.5	78	76.5	77.5	77
			60Hz	83	81.5	79.5	78	76.5	77.5	77
Enthalpy exchange Efficiency (%)	for heating	(Extra high)	50Hz	74.5	70	65	72	69.5	71	68.5
			60Hz	74.5	70	65	72	69.5	71	68.5
		High	50Hz	74.5	70	65	72	69.5	71	68.5
			60Hz	74.5	70	65	72	69.5	71	68.5
		Low	50Hz	76	74	71.5	73.5	71.5	71.5	71.5
			60Hz	76	74	71.5	73.5	71.5	71.5	71.5
	for cooling	(Extra high)	50Hz	69.5	65	60.5	64.5	61.5	64	60.5
			60Hz	69.5	65	60.5	64.5	61.5	64	60.5
		High	50Hz	69.5	65	60.5	64.5	61.5	64	60.5
			60Hz	69.5	65	60.5	64.5	61.5	64	60.5
		Low	50Hz	71	69	67	66.5	64	65.5	64.5
			60Hz	71	69	67	66.5	64	65.5	64.5

Item	Model No. / Fan Speed	VN-M150HE	VN-M250HE	VN-M350HE	VN-M500HE	VN-M650HE	VN-M800HE	VN-M1000HE
External dimensions (Length x Width x Height) (mm)		900 x 900 x 290			1140 x 1140 x 350		1189 x 1189 x 400	
Product weight (kg)		36	36	38	53	53	70	70
Applicable duct nominal diameter (mm)		Ø100	Ø150		Ø200		Ø250	

* Sound Power Level is less than 70 dBA.

10 Before Calling for Service

Check the points described below before asking for repair servicing.

Symptom	Cause
Operation does not start after pressing the button.	• Is the circuit breaker turned off?
	• Has a power failure occurred?
	• Does the indicator light up? (The ventilation delay setting is set to “ON” and it is not malfunction. The Air to Air Heat Exchanger will start running after the time set has passed. Consult your dealer for details.)
The unit runs though the operation lamp does not turn on.	Does the or 24H indicator appear on the display? The nighttime heat purge operation or 24-hour ventilation is set to “ON”. See page 79 for how to use the functions. Consult your dealer to change the setting to “OFF”.
The unit starts running without any operation of the remote controller.	Has the unit just recovered from a power failure or have you just turned on the circuit breaker? (The settings concerning recovering from power failure are set to “ON”. Consult your dealer for details.

11 Troubleshooting

⚠ CAUTION

If any of the following conditions occur, turn off the main power supply switch and immediately contact the dealer:

- Switch operation does not work properly.
- The main power fuse often blows out, or the circuit breaker is often activated.
- A foreign matter or water fall indoor the Air to Air Heat Exchanger.
- When the Air to Air Heat Exchanger does not operate even after the cause of the protective device activation has been removed.
  (The operation lamp and 🔧 on the remote controller are flashing. When 🔧 and a combination of E, F, H, L, or P and a number are displayed on the remote controller, also inform a qualified service person of the display content.)
- Any other unusual conditions are observed.

Confirmation and check

When a trouble occurred in the Air to Air Heat Exchanger, the check code and the unit No. of the Air to Air Heat Exchanger appear on the display part of the remote controller.
The check code is only displayed during the operation.
If the display disappears, operate the Air to Air Heat Exchanger according to the following "Confirmation of error history" for confirmation.
* Unit No. of the Air to Air Heat Exchanger is 31-∗∗.

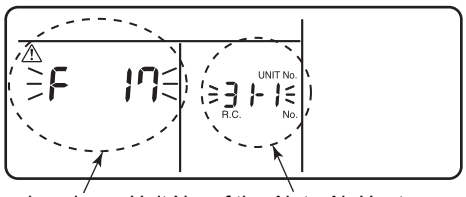

Check code — Unit No. of the Air to Air Heat Exchanger in which an error occurred

Confirmation of error history

When a trouble occurred on the Air to Air Heat Exchanger, the trouble history can be confirmed with the following procedure. (The trouble history is stored in memory up to 4 troubles.)
The history can be confirmed from both operating status and stop status.

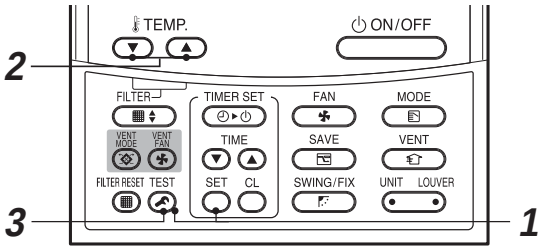

Procedure	Description
1	When pushing SET and TEST buttons at the same time for 4 seconds or more, the following display appears. If [🔧 Service check] is displayed, the mode enters in the trouble history mode. • [01 : Order of trouble history] is displayed in CODE No. window. • [Check code] is displayed. • [Unit No. of the Air to Air Heat Exchanger in which an error occurred] is displayed in UNIT No.. * Unit No. of the Air to Air Heat Exchanger is 31-∗∗. 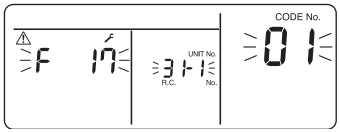
2	Every pushing of [▼ / ▲] button used to set temperature, the trouble history stored in memory is displayed in order. The numbers in CODE No. indicate CODE No. [01] (latest) to [04] (oldest). **CAUTION** Do not push CL button because all the trouble history of the Air to Air Heat Exchanger will be deleted.
3	After confirmation, push TEST button to return to the usual display.

1. Check the troubles according to the above procedure.
2. Ask an authorized dealer or qualified service (maintenance) professional to repair or maintain the Air to Air Heat Exchanger.
3. More details of the error code are explained in Installation Manual.

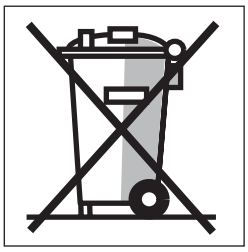

IMPORTANT INFORMATION AND WARNING:
READ BEFORE INSTALLING THE UNIT. KEEP IN A SAFE PLACE. THE INFORMATION IN THIS BOOKLET IS NEEDED FOR END OF LIFE, DISPOSAL OR REUSE OF THE UNIT.

- We are very sensitive to environment and welcome the 2002/96/EC Directive WEEE (Waste Electrical and Electronic Equipment).
- This product is compliant with EU directive 2002/96/EC. It must be collected separately after its use is completed, and cannot be disposed of as unsorted municipal waste.
- The objectives of EU directive 2002/96/EC are to tackle the fast increasing waste stream of electrical and electronic equipment, increase recycling of electric & electronic equipment ("EEE"), and to limit the total quantity of waste EEE ("WEEE") going to final disposal.
- The crossed-out wheeled bin symbol that is affixed to the product means that this product falls under the Directive.
- The user is responsible for returning the product to the appropriate collection facility, as specified by your municipality or the distributor.
  In case of a new product installation, it may be possible to have the distributor pick up old WEEE directly.
- The producer, importer and distributor of the product are responsible for collection and treatment of waste, either directly or through a collective system.
  The list of our distributor in each country is shown below.
- In case of a violation of the Directive, sanctions are set in each country.
- We are in general following the "CECED interpretation," and consider the WEEE applicable to Portable units, Dehumidifiers, WRACs (Window Room Air Conditioners), Split Systems up to 12 kW, plug in refrigerators and freezers.
- Nevertheless, there may be differences among member state laws. In case country laws exclude some products from WEEE scope, country law must be followed, and WEEE obligations do not have to be followed for products that fall out of country low scope.
- This directive does not apply to products sold outside European Community. In case the product is sold outside the EU, WEEE obligations do not have to be followed, while compliance with local regulations must be ensured.
- For additional information, please contact the municipal facility, the shop/dealer/installer that sold the product, or the producer.

❶ Country
❷ Name of Company responsible for WEEE.

❶	❷
Austria	AIRCOND, Klimaanlagen Handelsgesellshcaft m.b.H Petersgasse 45, A-8010 Graz Austria
Belgium	DOLPHIN NV, Fotografi elaan 12, B-2610, Antwerpen Belgium
Cyprus	Carrier Hellas Airconditioning S.A.- 4g Andersen street- 11525 Athens, Greece
Denmark	GIDEX A/S, Korshoj 10, 3600 Frederikssund, Denmark
Estonia	Carrier OY Linnavuorentie 28A 00950 Helsinki, Finland
Finland	Carrier OY Linnavuorentie 28A 00950 Helsinki, Finland
France	Carrier S.A. Route de Thil BP 49 01122 Montiuel Cedex France
Germany	Carrier GmbH & Co. KG Edisonstrasse 2 85716 Unterschleissheim Germany
Greece	Carrier Hellas Airconditioning S.A.- 4g Andersen street- 11525 Athens, Greece
Holland	INTERCOOL Technics BV Nikkelstraat 39, Postbus 76 2980 AB Ridderkerk Netherlands

❶	❷
Ireland	GT Phelan Unit 30 Southern Cross Business Park Bray Co Wicklow, Ireland
Italy	Carrier SpA Via R. Sanzio, 9 20058 Villasanta (Milano), Italy
Latvia	Carrier OY Linnavuorentie 28A 00950 Helsinki, Finland
Lithuania	Carrier OY Linnavuorenlie 28A 00950 Helsinki, Finland
Luxembourg	DOLPHIN NV Fotografi elaan 12, B-2610, Antwerpen Belgium
Malta	CUTRICO Services Ltd, Cutrico Building Psala Street, Sta Venea HMR 16, Malta
Norway	Carrier AB - P.O.BOX 8946- Arods Industrivag 32. S-402 73 Gothenburg, Sweden
Poland	Carrier Polska Sp. Z.o.o. Postepu 14 02-676 Warsaw Poland
Portugal	Carrier Portugal - AR Condicionado LDA Avenida do Forte, Nr. 3 Editi cio Suecia I,Piso 1 Camaxide 2794-043 Portugal

❶	❷
UK	Toshiba Carrier UK Ltd Porsham Close, Belliver Ind. Est. Plymouth, Devon, PL6 7DB UK
Czech Republic	AIRCOND, Klimaanlagen Handelsgesellshcaft m.b.H Petersgasse 45, A-8010 Graz Austria
Slovakia	AIRCOND, Klimaanlagen Handelsgesellshcaft m.b.H Petersgasse 45, A-8010 Graz Austria
Slovenia	AIRCOND, Klimaanlagen Handelsgesellshcaft m.b.H Petersgasse 45, A-8010 Graz Austria
Spain	Carrier Espana S.L. - Paseo Castellana 36-38, 28046 Madrid Spain
Sweden	Carrier AB - P.O.BOX 8946- Arods Industrivag 32 . S-402 73 Gothenburg, Sweden
Hungary	AIRCOND, Klimaanlagen Handelsgesellshcaft m.b.H Petersgasse 45, A-8010 Graz Austria

The manufacturer reserves the right to change any product specifications without notice.

Declaration of Incorporation of Partly Completed Machinery

Manufacturer:	Toshiba Carrier Corporation 336 Tadehara, Fuji-shi, Shizuoka-ken 416-8521 JAPAN
Representative/ TCF holder:	Toshiba Carrier UK Ltd. Porsham Close, Belliver Industrial Estate, PLYMOUTH, Devon, PL6 7DB. United Kingdom

Hereby declares that the machinery described below:

Generic Denomination:	Air to Air Heat Exchanger
Model/type:	VN-M150HE VN-M250HE VN-M350HE VN-M500HE VN-M650HE VN-M800HE VN-M1000HE
Commercial name:	TOSHIBA Air to Air Heat Exchanger

Complies with the provisions of the “Machinery” Directive (Directive 2006/42/EC) and the regulations transposing into national law.

Must not be put into service until the final machinery into which it is to be incorporated has been declared in conformity with the provisions of Machinery Directive, where appropriate.

NOTE

This declaration becomes invalid if technical or operational modifications are introduced without the manufacturer’s consent.

12 Installation Manual

Original instruction

Thank you very much for purchasing TOSHIBA Air to Air Heat Exchanger.
Please read this owner's manual carefully before using your Air to Air Heat Exchanger.
- Obtain the "Owner's manual" and "Installation manual" from constructor (or dealer).

Request to constructor or dealer
- Please clearly explain the contents of the Owner's manual and hand over it.

- Read this Installation Manual thoroughly to fully understand everything about your Toshiba Air to Air Heat Exchanger and be able to install it properly.
- Ask a qualified installer or qualified service person to perform installation.
- System parts such as a wired remote controller (sold separately) are necessary for using this unit.
- After installation, perform a test operation and confirm the safety, then explain to the customer how to use this unit. Give this installation manual to the customer and ask him/her to keep it with the owner's manual.

■ Handover to the Customer

- Hand the owner's manual and installation manual to the customer.
- Before the handover, explain fully to the customer the contents of the owner's manual.

Contents

Please read carefully through these instructions that contain important information which complies with the “Machinery” Directive (Directive 2006/42/EC), and ensure that you understand them.

Generic Denomination: Air to Air Heat Exchanger

Definition of Qualified Installer or Qualified Service Person

The Air to Air Heat Exchanger must be installed, maintained, repaired and removed by a qualified installer or qualified service person. When any of these jobs is to be done, ask a qualified installer or qualified service person to do them for you.
A qualified installer or qualified service person is an agent who has the qualifications and knowledge described in the table below.

Agent	Qualifications and knowledge which the agent must have
• Qualified installer	• The qualified installer is a person who installs, maintains, relocates and removes the Air to Air Heat Exchanger made by Toshiba Carrier Corporation. He or she has been trained to install, maintain, relocate and remove the Air to Air Heat Exchanger made by Toshiba Carrier Corporation or, alternatively, he or she has been instructed in such operations by an individual or individuals who have been trained and is thus thoroughly acquainted with the knowledge related to these operations. • The qualified installer who is allowed to do the electrical work involved in installation, relocation and removal has the qualifications pertaining to this electrical work as stipulated by the local laws and regulations, and he or she is a person who has been trained in matters relating to electrical work on the Air to Air Heat Exchanger made by Toshiba Carrier Corporation or, alternatively, he or she has been instructed in such matters by an individual or individuals who have been trained and is thus thoroughly acquainted with the knowledge related to this work. • The qualified installer who is allowed to work at heights has been trained in matters relating to working at heights with the Air to Air Heat Exchanger made by Toshiba Carrier Corporation or, alternatively, he or she has been instructed in such matters by an individual or individuals who have been trained and is thus thoroughly acquainted with the knowledge related to this work.
• Qualified service person	• The qualified service person is a person who installs, repairs, maintains, relocates and removes the Air to Air Heat Exchanger made by Toshiba Carrier Corporation. He or she has been trained to install, repair, maintain, relocate and remove the Air to Air Heat Exchanger made by Toshiba Carrier Corporation or, alternatively, he or she has been instructed in such operations by an individual or individuals who have been trained and is thus thoroughly acquainted with the knowledge related to these operations. • The qualified service person who is allowed to do the electrical work involved in installation, repair, relocation and removal has the qualifications pertaining to this electrical work as stipulated by the local laws and regulations, and he or she is a person who has been trained in matters relating to electrical work on the Air to Air Heat Exchanger made by Toshiba Carrier Corporation or, alternatively, he or she has been instructed in such matters by an individual or individuals who have been trained and is thus thoroughly acquainted with the knowledge related to this work. • The qualified service person who is allowed to work at heights has been trained in matters relating to working at heights with the Air to Air Heat Exchanger made by Toshiba Carrier Corporation or, alternatively, he or she has been instructed in such matters by an individual or individuals who have been trained and is thus thoroughly acquainted with the knowledge related to this work.

Definition of Protective Gear

When the Air to Air Heat Exchanger is to be transported, installed, maintained, repaired or removed, wear protective gloves and ‘safety’ work clothing.
In addition to such normal protective gear, wear the protective gear described below when undertaking the special work detailed in the table below.
Failure to wear the proper protective gear is dangerous because you will be more susceptible to injury, burns, electric shocks and other injuries.

Work undertaken	Protective gear worn
All types of work	Protective gloves ‘Safety’ working clothing
Electrical-related work	Gloves to provide protection for electricians and from heat
Work done at heights (50 cm or more)	Helmets for use in industry
Transportation of heavy objects	Shoes with additional protective toe cap

■ Warning Indications on the Air to Air Heat Exchanger

Warning indication	Description
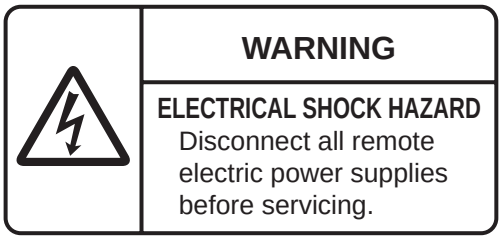	**WARNING** ELECTRICAL SHOCK HAZARD Disconnect all remote electric power supplies before servicing.
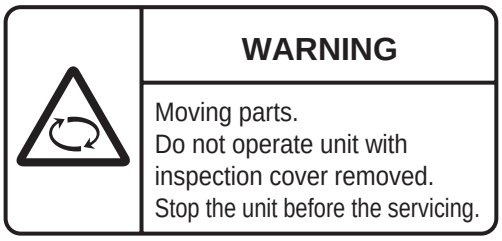	**WARNING** Moving parts. Do not operate unit with inspection cover removed. Stop the unit before the servicing.
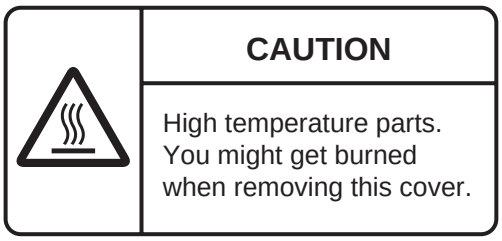	**CAUTION** High temperature parts. You might get burned when removing this cover.

1 Precautions for Safety

⚠ WARNING

General

- Before starting to install the Air to Air Heat Exchanger, read carefully through the Installation Manual, and follow its instructions to install the Air to Air Heat Exchanger.
- Only a qualified installer(*1) or qualified service person(*1) is allowed to install the Air to Air Heat Exchanger. If the Air to Air Heat Exchanger is installed by an unqualified individual, a fire, electric shocks, injury, water leakage, noise and/or vibration may result.
- If using separately sold products, make sure to use Toshiba specified products only. Using unspecified products may cause fire, electric shock, water leak or other failure.
- Before opening the electrical control cover or inspection cover of the Air to Air Heat Exchanger, set the circuit breaker to the OFF position. Failure to set the circuit breaker to the OFF position may result in electric shocks through contact with the interior parts. Only a qualified installer(*1) or qualified service person(*1) is allowed to remove the electrical control cover or inspection cover of the Air to Air Heat Exchanger and do the work required.
- Before carrying out the installation, maintenance, repair or removal work, set the circuit breaker to the OFF position. Otherwise, electric shocks may result.
- Place a “Work in progress” sign near the circuit breaker while the installation, maintenance, repair or removal work is being carried out. There is a danger of electric shocks if the circuit breaker is set to ON by mistake.
- Only a qualified installer(*1) or qualified service person(*1) is allowed to undertake work at heights using a stand of 50 cm or more or to remove the electrical control cover or inspection cover of the Air to Air Heat Exchanger to undertake work.
- Wear protective gloves and safety work clothing during installation, servicing and removal.
- When working at heights, use a ladder which complies with the ISO 14122 standard, and follow the procedure in the ladder’s instructions. Also wear a helmet for use in industry as protective gear to undertake the work.
- When cleaning the filter or heat exchange element of the Air to Air Heat Exchanger, set the circuit breaker to OFF without fail, and place a “Work in progress” sign near the circuit breaker before proceeding with the work.
- When working at heights, put a sign in place so that no-one will approach the work location, before proceeding with the work. Parts and other objects may fall from above, possibly injuring a person below.
- The Air to Air Heat Exchanger must be transported in stable condition. In case an accident such as dropping of the unit occurs while transporting the Air to Air Heat Exchanger, contact the dealer.
- Do not move or repair any unit by yourself. There is high voltage inside the unit. You may get electric shock when removing the cover and main unit.
- Do not modify the products. Do not also disassemble or modify the parts. It may cause a fire, electric shock or injury.
- Confirm whether there is a risk of the Air to Air Heat Exchanger falling down during maintenance or repairing work.
- Before opening the Supply/Exhaust air grill, set the circuit breaker to the OFF position. Otherwise, your hand may be caught in the rotating parts inside and an injury may result.

Selection of installation location

- Do not install the Air to Air Heat Exchanger in a location that may be subject to a risk of expire to a combustible gas. If a combustible gas leaks and becomes concentrated around the unit, a fire may occur.
- When transporting the Air to Air Heat Exchanger, wear shoes with additional protective toe caps, protective gloves and other protective clothing.
- When transporting the Air to Air Heat Exchanger, do not take hold of the bands around the packing carton. You may injure yourself if the bands should break.
- Install the Air to Air Heat Exchanger at least 2.5 m above the floor level since otherwise the users may injure themselves or receive electric shocks if they poke their fingers or other objects into the Air to Air Heat Exchanger while it is running.
- Do not place any combustion appliance in a place where it is directly exposed to the wind of Air to Air Heat Exchanger, otherwise it may cause imperfect combustion.
- Use a hand track or forklift to carry the unit. When carrying it by human power, have four persons or more; otherwise, you may strain your back.

Installation

- When the Air to Air Heat Exchanger is to be suspended, the designated hanging bolts (M10 to M12) and nuts (M10 to M12) must be used.
- Install the Air to Air Heat Exchanger at enough strong places to withstand the weight of the unit. If the strength is not enough, the unit may fall down resulting in injury.
- Follow the instructions in the Installation Manual to install the Air to Air Heat Exchanger. Failure to follow these instructions may cause the product to fall down or topple over or give rise to noise, vibration, water leakage, etc.

Electrical wiring

- Only a qualified installer(*1) or qualified service person(*1) is allowed to carry out the electrical work of the Air to Air Heat Exchanger. Under no circumstances must this work be done by an unqualified individual since failure to carry out the work properly may result in electric shocks and/or electrical leaks.
- When repairing the electrical parts or undertaking other electrical jobs, wear gloves to provide protection for electricians and from heat. Failure to wear this protective gear may result in burn.
- Use wiring that meets the specifications in the Installation Manual and the stipulations in the local regulations and laws. Use of wiring which does not meet the specifications may give rise to electric shocks, electrical leakage, smoking and/or a fire.
- Connect earth wire. (Grounding work)
  Incomplete earthing causes an electric shock.
- Do not connect earth wires to gas pipes, water pipes, and lightning rods or earth wires for telephone wires.
- After completing the repair or relocation work, check that the earth wires are connected properly.
- Install a circuit breaker that meets the specifications in the installation manual and the stipulations in the local regulations and laws. Use an exclusive power supply circuit for the Air to Air Heat Exchanger at the rated voltage.
- Install the circuit breaker where it can be easily accessed by the agent.
- When installing the circuit breaker outdoors, install one which is designed to be used outdoors.
- Under no circumstances must the power cable be extended. Connection trouble in the places where the cable is extended may give rise to smoking and/or a fire.
- Electrical wiring work shall be conducted according to law and regulation in the community and installation manual. Failure to do so may result in electrocution or short circuit.
- When carrying out electric connection, use the wire specified in the Installation Manual and connect and fix the wires securely to prevent them applying external force to the terminals. Improper connection or fixing may result in fire.

Test run

- Before operating the Air to Air Heat Exchanger after having completed the work, check that the electrical control cover and inspection cover are closed, and set the circuit breaker to the ON position. You may receive an electric shock if the power is turned on without first conducting these checks.
- When there is some kind of trouble (such as when an error display has appeared, there is a smell of burning, abnormal sounds are heard, or water is leaking) has occurred in the Air to Air Heat Exchanger, do not touch the Air to Air Heat Exchanger yourself but set the circuit breaker to the OFF position, and contact a qualified service person. Take steps to ensure that the power will not be turned on (by marking “out of service” near the circuit breaker, for instance) until qualified service person arrives. Continuing to use the Air to Air Heat Exchanger in the trouble status may cause mechanical problems to escalate or result in electric shocks, etc.
- After the work has finished, use an insulation tester set (500V Megger) to check the resistance is 1 MΩ or more between the charge section and the non-charge metal section (Earth section). If the resistance value is low, a disaster such as a leak or electric shock is caused at user’s side.
- Upon completion of the installation work, check the insulation resistance. Then conduct a test run to check that the Air to Air Heat Exchanger is operating properly.

Explanations given to user

- Upon completion of the installation work, tell the user where the circuit breaker is located. If the user does not know where the circuit breaker is, he or she will not be able to turn it off in the event that trouble has occurred in the Air to Air Heat Exchanger.
- After the installation work, follow the Owner’s Manual to explain to the customer how to use and maintain the unit.
- If there is a danger of the Air to Air Heat Exchanger falling, do not approach the Air to Air Heat Exchanger but set the circuit breaker to the OFF position, and contact a qualified service person(*1) to have the repairs done. Do not set the circuit breaker to the ON position until the repairs are completed.

Relocation

- Only a qualified installer(*1) or qualified service person(*1) is allowed to relocate the Air to Air Heat Exchanger. It is dangerous for the Air to Air Heat Exchanger to be relocated by an unqualified individual since a fire, electric shocks, injury, water leakage, noise and/or vibration may result.

(*1) Refer to the “Definition of Qualified Installer or Qualified Service Person.”

⚠ CAUTION

To Disconnect the Appliance from Main Power Supply.

- Means for disconnection having a contact separation in all poles at least 3 mm must be incorporated in the fixed wiring in accordance with the wiring rules.

The installation fuse (All Types Can Be Used) must be used for the power supply line of this Air to Air Heat Exchanger.

- The external air intake opening should be positioned away from the exhaust openings of combustion gases. The intake of such gases could cause a lack of oxygen in the room.
  The external air intake opening should not be positioned where discharged air may directly enter it.
  A situation like this will lead to the room being contaminated and this may pose a health risk.
- Netting or something similar should be provided at the external air intake opening to prevent birds or other things interfering with the unit.
- Nests or other foreign objects should be removed. That could cause a lack of oxygen in the room.
- To pierce the metal duct through the metal lath or the wire lath or the metal plate of the wooden facility, do not forget to insulate electrically between the duct and the wall. Otherwise, it would cause an electric shock or an electric leakage.
- Install the outdoor duct in a falling gradient toward the outside so as to prevent water from coming in. If it is not installed so, the building is likely to be flooded, wetting the household effects.
- Heat-insulate the outdoor duct (including the indoor side, if necessary) to prevent dewing. If heat insulation is not adequate, water likely goes indoor and wets the household properties.
- When it is high humid and high temperature inside the ceiling, a ventilation system must be installed inside the ceiling. Otherwise, it could cause a fire or an electric leakage.
- Install the power line and the connecting line with accuracy so the power source cover may not float. If the installation of the electrical control cover is inappropriate, the pin connection area is likely to cause a heat generation, a fire and an electric shock due to dust or powder.
- Do not use the unit at the other voltages than the rated one. It could cause a fire or an electric shock.
- Do not install the unit in locations with large amounts of oily smoke, such as food preparation areas. It could cause a fire.
- Do not install the unit at the place of a high temperature or a flame.
  It could cause a heat generation or a fire.
- Do not install in locations with high humidity, such as close to bathroom or other similar environment. It could cause an electric shock or an electric leakage or other troubles.
- Install an earth leakage breaker that is not tripped by shock waves.
  If an earth leakage breaker is not installed, an electric shock may be caused.
- Do not install the unit and inside air intake in a place such as a machine factory, chemical plant, or research institute, where acids, alkaline, organic solvents, or coating materials are handled and toxic gases and/or corrosive gases may be produced.
  Otherwise gas poisoning may occur and/or the inside of the unit may be eroded or deteriorated. The deterioration and erosion may result in an fire.
- After installation, switch off the circuit breaker for safety if the unit will not be used for a long time.
- Attach the parts such as the inspection cover securely.

■ Disposal

Dispose of Air to Air Heat Exchanger in accordance with the 2002/96/EC Directive WEEE (Waste Electrical and Electronic Equipment).

2 Accessory Parts

Name	Quantity	Shape	Usage
Installation manual	1	—	(Hand it to the customers.)
CD-ROM (Owner's manual and Installation manual)	1	—	(For other languages that do not appear in this manual, please refer to the enclosed CD-ROM.)
Owner's manual	1	—	(Hand it to the customers.)
Adapter	4		Connection parts for the duct
Screw	16/24		Screws for attaching the adapter

3 Cautions for Installation

Make the inspection opening at the specific place on the ceiling so the constant cleaning or the equipment checking of filter and heat exchange element can be performed.

- **The inspection opening shown below is necessary to clean the heat exchange element and the filter as required. If not cleaned, they are likely to get clogged, resulting in degradation of performance.**
- **Use forklift to carry in the Air to Air Heat Exchanger units and use winch or hoist at installation of them.**

Unit: mm

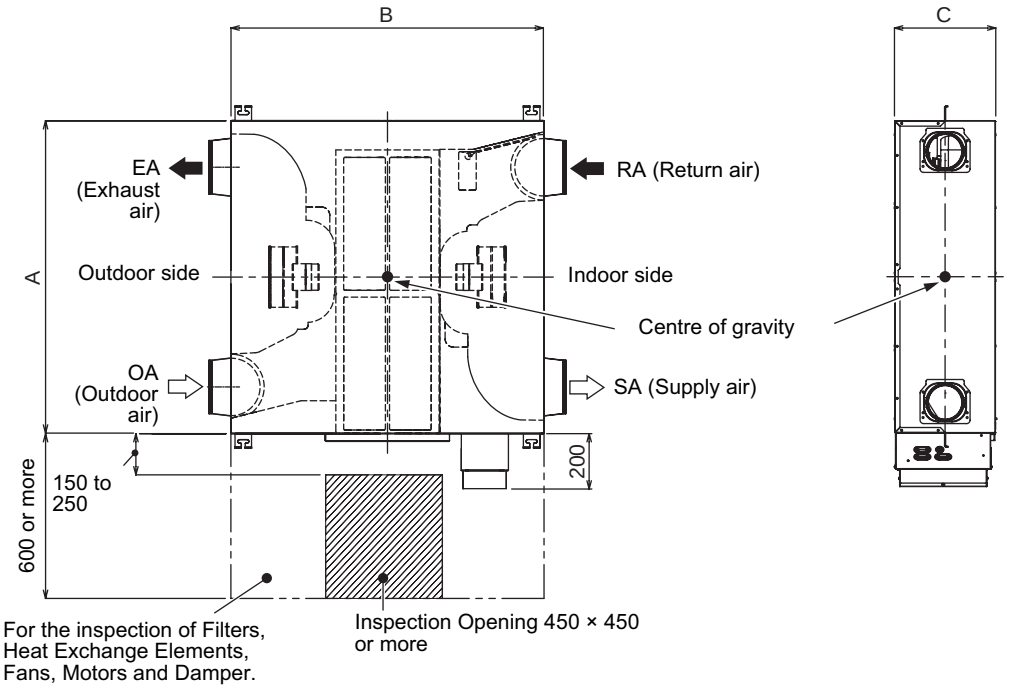

Model No.	A (mm)	B (mm)	C (mm)	Weight (kg)	Heat exchange element
VN-M150HE, M250HE	900	900	290	36	2
VN-M350HE	900	900	290	38	2
VN-M500HE, M650HE	1140	1140	350	53	2
VN-M800HE, M1000HE	1189	1189	400	70	2

- **Helmet must be worn to protect your head from falling objects.**
  Especially, when you work under an inspection opening, helmet must be worn to protect your head from falling objects from the opening.

- **Observe the following conditions when using the Air to Air Heat Exchanger.**

Installation requirements	:	Temperature range −10°C to +40°C, relative humidity 80% or less
Outdoor air conditions	:	Temperature range −15°C to +43°C, relative humidity 80% or less
Return air conditions	:	Temperature range +5°C to +40°C, relative humidity 80% or less

Do not install the Air to Air Heat Exchanger in a place where flames can come into contact with the unit.
If the Air to Air Heat Exchanger is used for a long time without observing the conditions above, deterioration or deformation of resin parts will occur and a malfunction may result.

- **Dewing and frosting.**
  - In cold regions, the surface of the unit or the duct connector may be affected by condensation or frosting depending on the outdoor air conditions or temperature/humidity of the ceiling cavity even though the conditions for use are observed. In this case, add a heat insulator.
  - Do not install the unit in a place where there is something that must not become wet. Depending on the temperature or humidity of outdoor air and the installation place, water droplets may fall from the unit.
  - As shown in the figure to the below, suppose a high temp absorbing air condition A and a low temp absorbing air condition B are plotted on the air line figure, then a high temp air A is heat-exchanged by the unit and goes out of the saturation curve as shown by Point C. In this case, the unit will be dewed or frosted. To avoid this, heating a low temp air B up to B' is required so as to get C' below the saturation curve, before using the unit.

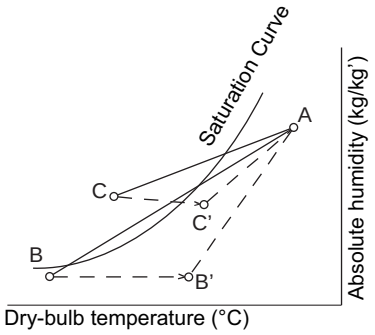

- **Refrain from the following duct installation works.**

1) Excessive bending

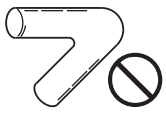

2) Multi-times bending

3) Making the connecting duct smaller

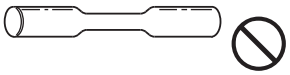

4) Bending near the exhaust air duct

  - Do not install it near the water-heater
  - Do not use in bathrooms or food preparation areas or in similar condition place.
    If the unit is used at the place of much soot and high humidity large amounts of oily smoke, the filter or the heat exchange element gets clogged and it will be disable to be use.
  - Duct length must be longer than 850 mm.

4 Separately Sold Parts

- **Wired remote controller (for the Air to Air Heat Exchanger)**

NRC-01HE (Sold separately)
Up to 8 units of the Air to Air Heat Exchanger can be operated using this remote controller.

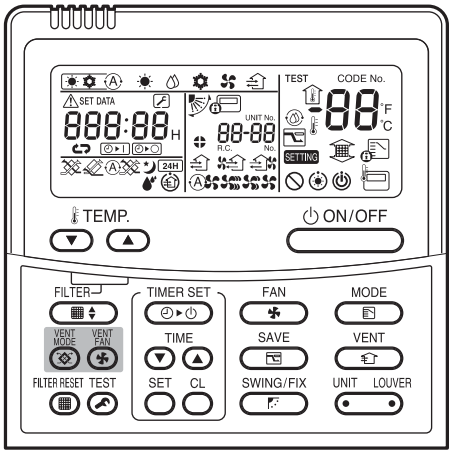

5 Reference Diagram

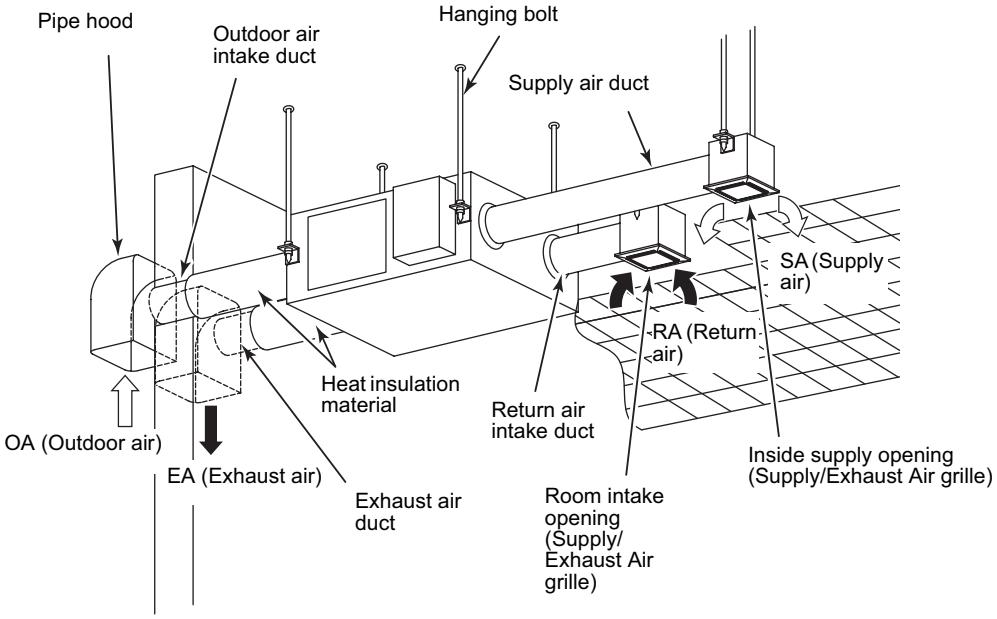

6 Model List

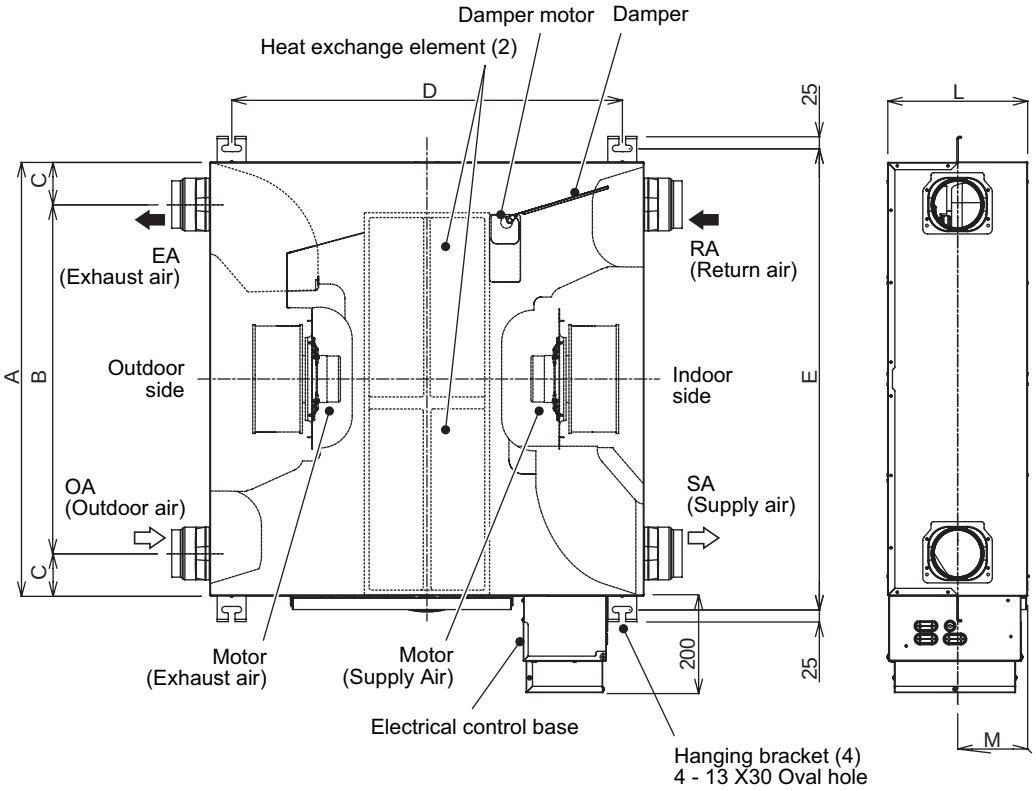

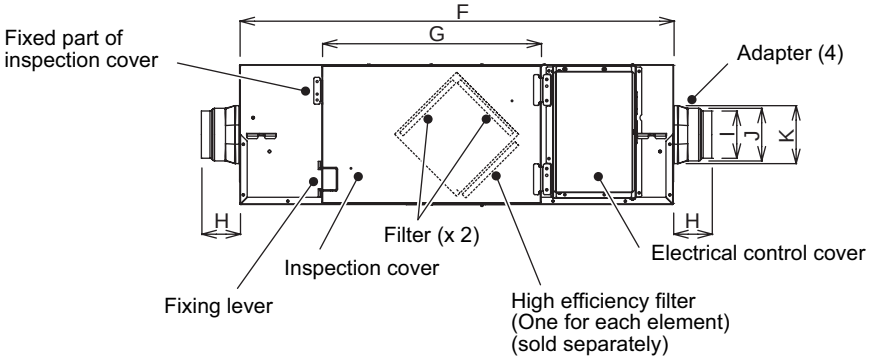

Unit: mm

Model name	A	B	C	D	E	F	G	H	I	J	K	L	M	Applicable duct nominal diameter
VN-M150HE	900	724	88	810	957	900	454	80	Ø98	Ø110	Ø121	290	145	Ø100
VN-M250HE	900	670	115	810	957	900	454	97	Ø145	Ø158	Ø162	290	145	Ø150
VN-M350HE	900	670	115	810	957	900	454	97	Ø145	Ø158	Ø162	290	145	Ø150
VN-M500HE	1140	800	170	1050	1197	1140	454	80	Ø195	—	Ø212	350	175	Ø200
VN-M650HE	1140	800	170	1050	1197	1140	454	80	Ø195	—	Ø212	350	175	Ø200
VN-M800HE	1189	800	195	1099	1246	1189	454	85	Ø245	—	Ø262	400	200	Ø250
VN-M1000HE	1189	800	195	1099	1246	1189	454	85	Ø245	—	Ø262	400	200	Ø250

7 Installation

■ Attaching the adapter

- Attach the adapter to the unit using the accessory screws (4 or 6).

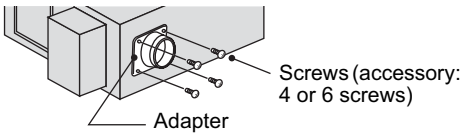

■ Attaching the washer and the nut

1) Preparation of the hanging bolt, nut, and washer is required.
2) Attach the washer and the nut to the hanging bolt (see the table on the below) according to the diagram on the below.

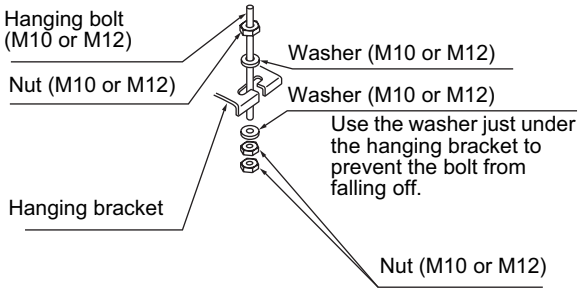

■ Fixing the unit

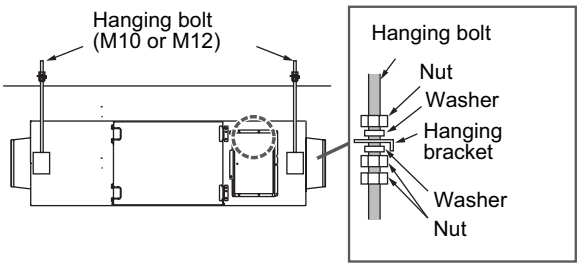

1) Hang the hanging bracket on the hanging bolt, then adjust the nut so that the unit is level.
2) Use a double nut and fasten it firmly so that the nut does not become loose.
   - If the unit is not installed properly, it will vibrate and may pose a hazard.
   - If the unit is not level, the damper unit will not work properly.
   - Install the unit firmly enough to support its own weight.

Model name	Weight (kg)	Hanging bolt
VN-M150HE	36	M10, M12
VN-M250HE	36	
VN-M350HE	38	
VN-M500HE	53	
VN-M650HE	53	
VN-M800HE	70	
VN-M1000HE	70	

⚠ CAUTION

- Use a commercially available vibration-proof fixture when the unit is installed in a place where preventing vibration is necessary.
- Leave a space of 450mm x 450mm or more for checking the filter, heat exchanging element, power source, or motor. Refer to “Cautions for Installation” for the location of the space required.

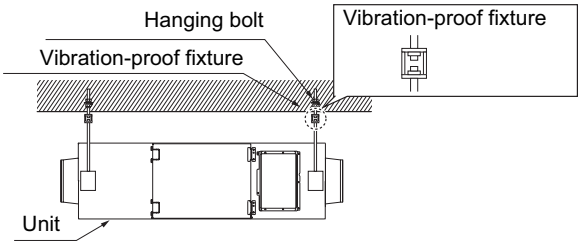

■ Cautions installing unit body upside down

- The hanging bracket does not need to be replaced.
- The printed image is reversed.

■ Duct Installation

- Duct installation is necessary to protect against access to live parts, rain water or contact with moving parts.
- Seal the junction of an adaptor and a duct with an aluminium tape firmly to prevent any air leakage.
- The room intake opening should be positioned as far as possible from the indoor supply opening.
- Use the specified ducts. (See the Model List)
- Install two outdoor ducts so they will be in the down gradient toward outdoor to prevent water from coming in. (Gradient: 1/100~1/50) (See the figure below)
  Heat-insulate two outdoor ducts (including outdoor air and exhaust air duct) to prevent dewing. (Material: Glass Wool, Thickness-25mm) (See the figure below)
  To pierce the metal duct through the metal lath or the wire lath or the metal plate of the wooden facility, insulate electrically between the duct and the wall. (Refer to the laws and regulations of the country concerned and the technical standard.)

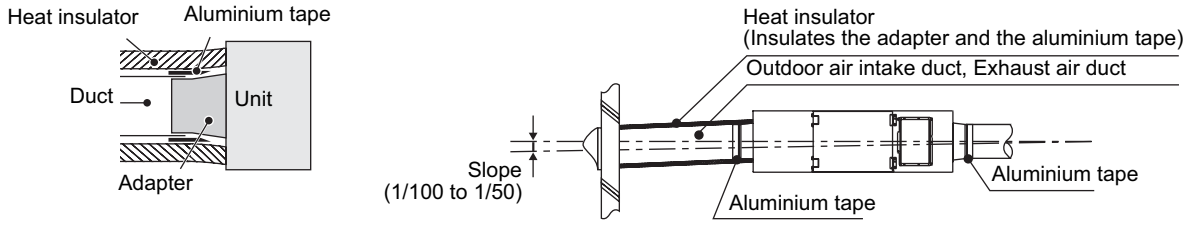

- It is recommended that an electric damper is used together with the Air to Air Heat Exchanger, as wind may enter the room while the unit is not in operation in windy places.

8 Electric Wiring

⚠ WARNING

1. **Using the specified wires, ensure to connect the wires, and fix wires securely so that the external tension to the wires do not affect the connecting part of the terminals.**
   Incomplete connection or fixation may cause a fire or other troubles.
2. **Connect earth wire. (grounding work)**
   Incomplete earthing cause an electric shock.
   Do not connect earth wires to gas pipes, water pipes, lightning rods or earth wires for telephone wires.
3. **Appliance shall be installed in accordance with national wiring regulations.**
   Capacity shortage of power circuit or incomplete installation may cause an electric shock or a fire.

⚠ CAUTION

- If incorrect/incomplete wiring is carried out, it will cause an electrical fire or smoke.
- Install an earth leakage breaker that is not tripped by shock waves.
  If an earth leakage breaker is not installed, an electric shock may be caused.
- Use the cord clamps attached to the product.
- Do not damage or scratch the conductive core and inner insulator of power and communication wires when peeling them.
- Use the power and communication wire of specified thickness, type, and protective devices required.
- Do not connect 220-240V power to the communication terminal blocks (Ⓤ3, Ⓤ4, Ⓐ, Ⓑ) for control wiring. (Otherwise, the system will fail.)

REQUIREMENT

- For power supply wiring, strictly conform to the Local Regulation in each country.
- After connecting wires to the terminal blocks, provide a trap and fix wires with the cord clamp.

■ Power and wiring Specifications

Power supply wire and communication wire should be locally procured.

See the table below for the power supply specifications. If the capacity is too small, the unit will suffer from overheating or burnout.

Item / Model name VN-		Power supply for Air to Air Heat Exchanger (*1)		
		Power supply	Circuit breaker (switch) Current rating (Fuse rating)	Power supply wire
Air to Air Heat Exchanger	M150HE to M1000HE	220V-240V~, 50Hz 220V~, 60Hz	15A	3-core, 1.5 mm^2 or 2.5 mm^2 (H07 RN-F or 60245 IEC 66)

*1: Prepare the exclusive power supply for the Air to Air Heat Exchanger

■ Communication wire

Item / Model name VN-		Communication wire	
		Central control wire (*2)	**Remote controller wire**
Air to Air Heat Exchanger	M150HE to M1000HE	2-core, non-polarity Shielded wire (Up to 1000m) 1.25 mm^2 (Up to 2000m) 2.0 mm^2	2-core, non-polarity 0.5 mm^2 to 2.0 mm^2

*2:
- The length of the communication wire is the total length of the outdoor/indoor transition wire and wire of the central control assuming that an interlocking system with the indoor unit or central control system is used.
- To prevent noise, use a 2 core shielded wire.

■ Remote controller wiring

Remote controller wiring, remote controller inter-unit wiring	2-core, non-polarity: 0.5 mm^2 to 2.0 mm^2

Total wire length of remote controller wiring and remote controller inter-unit wiring = L + L1 + L2 + ··· Ln	Up to 500mm
Total wire length of remote controller inter-unit wiring = L1 + L2 + ··· Ln	Up to 200mm

On the outside of the unit, do not allow the wire for the remote controller (communication wire) and the wire for AC220-240V to come into contact or put them together in one electrical conduit; otherwise, the control system may have trouble due to noise.

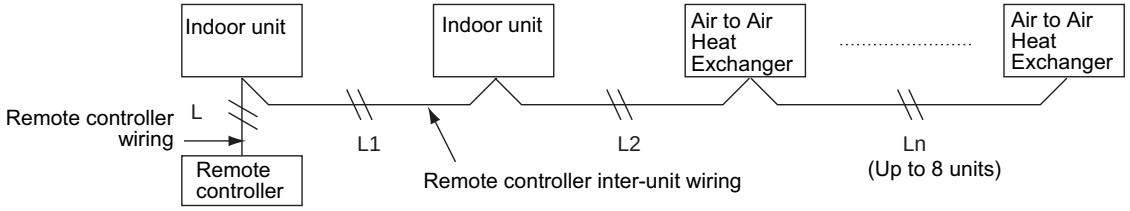

* The total length of the remote controller inter-unit wiring is the same for both between the indoor units and between the Air to Air Heat Exchanger.

■ Connection diagram

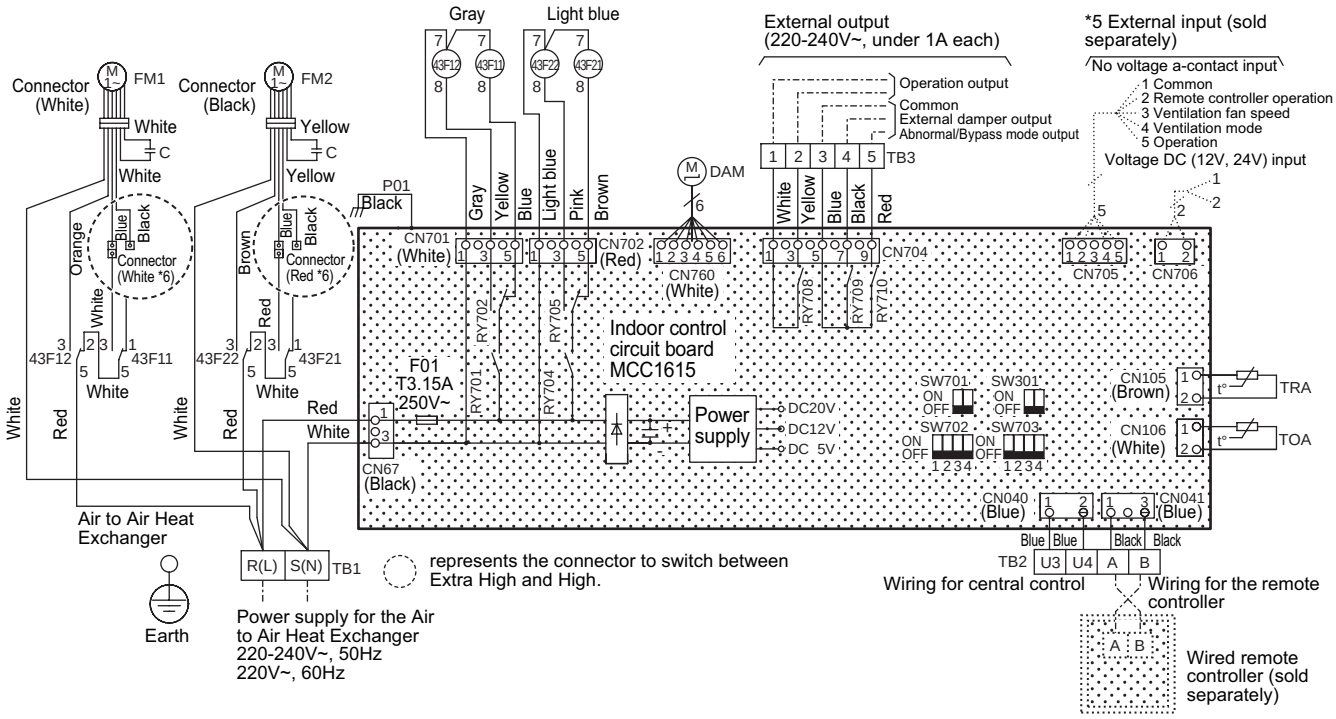

Code	Part name
CN***	Connector
F01	Fuse
FM1	Air supplying motor
FM2	Air exhausting motor
DAM	Damper motor
TRA	TRA sensor

Code	Part name
TOA	TOA sensor
RY701, RY702	Relay for air supplying motor
RY704, RY705	Relay for air exhausting motor
TB1	Terminal block (power supply)
TB2	Terminal block (communication)
TB3	Terminal block (external output)

Code	Part name
SW301, SW701 SW702, SW703	DIP switch
43F11, 43F12	Relay for air supplying motor
43F21, 43F22	Relay for air exhausting motor

1. The dotted line represents a wire procured locally, and the dashed line represents an option sold separately.
2. represents a terminal block, represents a connection terminal, and represents a connector on the printed circuit board.
3. represents a protective earth.
4. represents a printed circuit board.
5. Using a no voltage a-contact input of the external input (sold separately), the following operations are available:
   Between 1 and 2: Selecting the remote controller operation (Invalid/Valid)
   Between 1 and 3: Adjusting the ventilation fan speed (Low/High)
   Between 1 and 4: Selecting the ventilation mode (Bypass mode/Heat exchange mode)
   Between 1 and 5: Operation (ON/OFF)
   Use a microcurrent contact (DC12V, 1mA). In addition, ON/OFF operation is possible when using a voltage of DC12V or 24V.
6. Blue wire (High) is connected as factory default. To switch to “Extra High”, connect black wire’s connector instead of blue.
7. When the temperature of the outdoor air is below -10°C, the unit runs in the cold mode (the ventilator for air supply runs intermittently). The unit cannot run when the temperature of the outdoor air is below -15°C. The ventilator for air supply stops running and the ventilator for air exhaust also stops depending on the settings.
8. Even if “Bypass mode” is selected manually, the unit switches to “Heat exchange mode” automatically to prevent condensation when the temperature of the outdoor air is below 15°C. However, “Bypass mode” is still displayed.

■ Switches and connectors on the circuit board

Remove the 4 screws to detach the electrical control cover.

* Refer to “9 Installation Method for Each System Configuration” on page 109 about setting the switch.

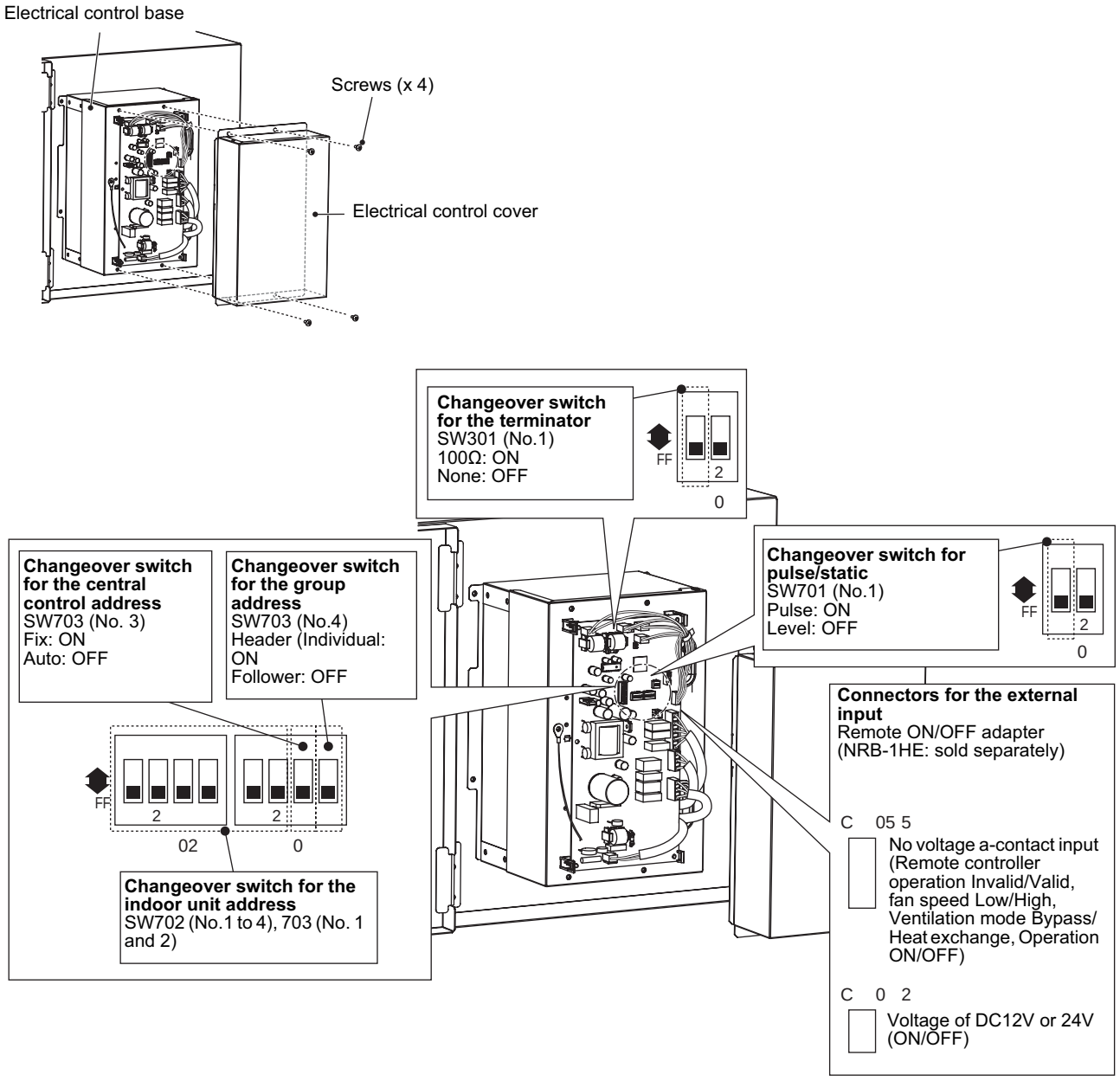

■ Wire connection

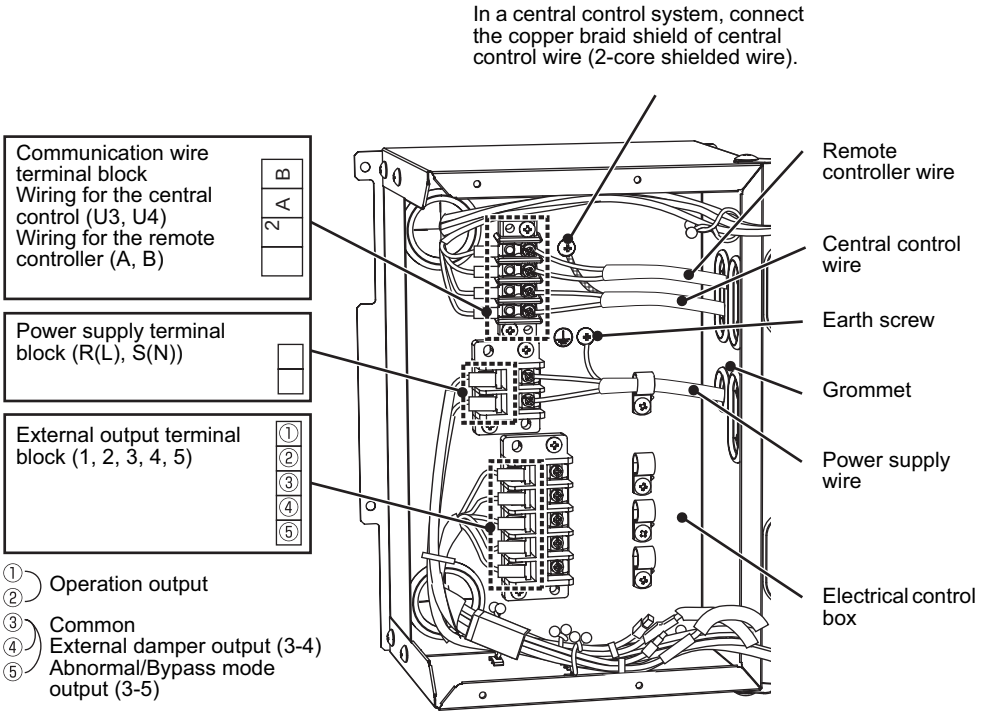

Power supply wire

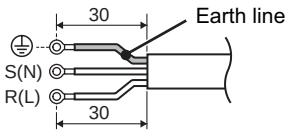

Central control wire

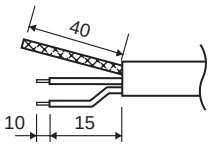

Remote controller wire

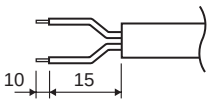

REQUIREMENT

- Pass the wires through the grommet of wiring connection holes of the Air to Air Heat Exchanger.
- Keep a margin (Approx. 100 mm) on a wire.
- The low-voltage circuit is provided for the remote controller.

- Rotate the electrical control base to open.
- Connect the power supply wire (R (L), S (N)) and the remote control wire (A, B).
- Connect the central control wire (U1/U3, U2/U4) or the external output terminal block (1 to 5) if necessary.
- Tighten the screws on the terminal board firmly, then fix the wiring on the electrical control box using the accessory cord clamp.
- Perform grounding work.

■ Switching between Extra High and High

⚠ WARNING

- Turn off the circuit breaker before switching between Extra High and High.

When switching to Extra High, connect the black lead wire (Extra High) to the connector.

* The blue lead wire (High) is connected as factory default.

* Connect the black lead wire both to the supplying air motor (white connector) and the exhausting air motor (red connector).

* Refer to “Connection diagram” for the connection method.

REQUIREMENT

- After connecting the black lead wire to the connectors, fix the lead wires using the cord clip.

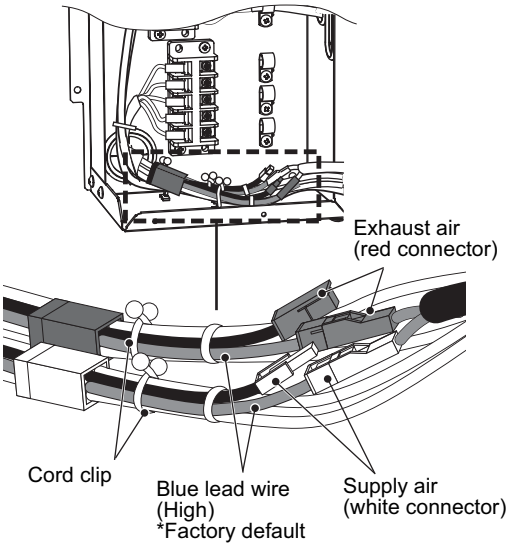

■ Remote Controller Wiring

- As the remote controller wire has non-polarity, there is no problem if connections to Air to Air Heat Exchanger terminal blocks A and B are reversed.

Wiring diagram

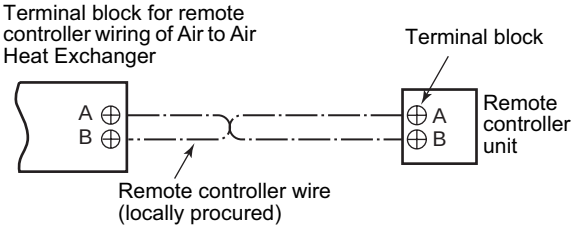

* For details of wiring/installation of the remote controller, refer to the Installation Manual enclosed to in the remote controller.

9 Installation Method for Each System Configuration

Settings and electric wiring differ depending on the system configuration. Perform electric wring according to the system examples shown in the table below. (Refer to page 114 to 118 for details.)

System example	Operation
A Air to Air Heat Exchanger system (One Air to Air Heat Exchanger is used.) 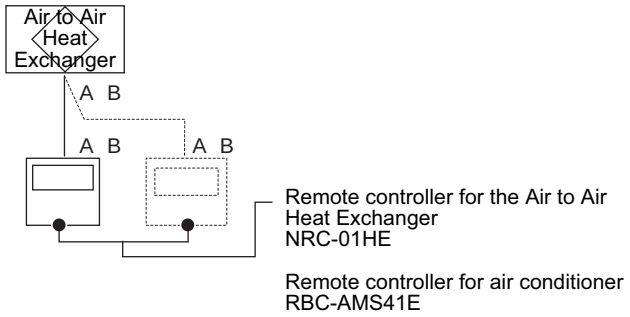 	• Using the remote controller for the Air to Air Heat Exchanger NRC-01HE, the unit can be started or stopped, control the ventilation fan speed, and select the ventilation mode. • If two remote controllers are used, the latter operation overrides the former and their indications always reflect the result of the latter operation. * The remote controllers for the air conditioners RBC-AMT32E are not compatible with a system in which only the Air to Air Heat Exchanger is used. Only on/off operation is available for RBC-AMS41E.
B Air to Air Heat Exchanger system (Multiple Air to Air Heat Exchangers are used.) 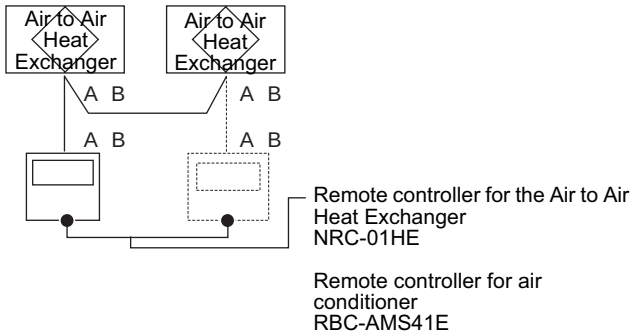 	• Using the remote controller for the Air to Air Heat Exchanger NRC-01HE, the unit can be started or stopped, control the ventilation fan speed, and select the ventilation mode. • If two remote controllers are used, the latter operation overrides the former and their indications always reflect the result of the latter operation and the settings of the header unit. * The remote controllers for the air conditioners RBC-AMT32E are not compatible with a system in which only the Air to Air Heat Exchanger is used. Only on/off operation is available for RBC-AMS41E.
C Air to Air Heat Exchanger system linked with air conditioners 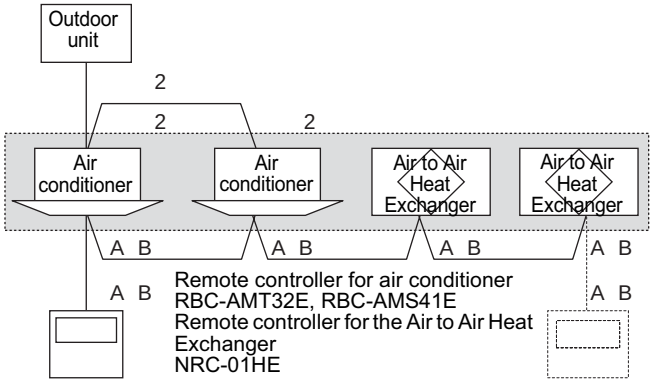 	• The remote controller for the air conditioner or the Air to Air Heat Exchanger can be used to ON/OFF the whole system. • The remote controller for the Air to Air Heat Exchanger NRC-01HE can be used to control the ventilation fan speed and ventilation mode of the Air to Air Heat Exchanger. • The remote controller for air conditioner RBC-AMT32E and RBC-AMS41E cannot be used to control the ventilation fan speed or ventilation mode of the Air to Air Heat Exchanger. • The remote controller for the air conditioner or the Air to Air Heat Exchanger can be used to ON/OFF the Air to Air Heat Exchanger separately. * Setting modifications are required for separate control. Refer to “11 Advanced Control” on page 124. • If two remote controllers are used, the latter operation overrides the former and their indications always reflect the result of the latter operation. In addition, the indications of the Air to Air Heat Exchanger always reflect the setting of the unit with the smallest indoor unit address number.

System example	Operation
D Central control system (When controlling the Air to Air Heat Exchanger only) 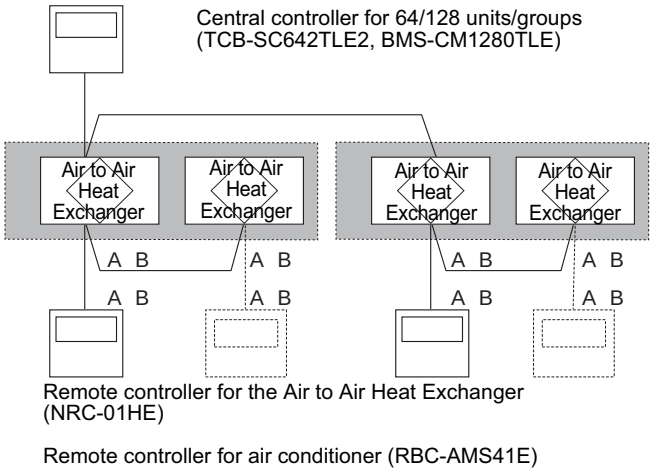 	• The central controller can be used to ON/OFF the whole system and separately ON/OFF groups of the Air to Air Heat Exchangers. • The central controller cannot be used to control the ventilation fan speed or ventilation mode of the Air to Air Heat Exchanger. • If the central controller and the remote controller for the Air to Air Heat Exchanger are used, the latter operation overrides the former. • The remote controller for the Air to Air Heat Exchanger (NRC-01HE) can be used to control the ventilation fan speed and ventilation mode of the Air to Air Heat Exchanger. * The remote controllers for the air conditioners (RBC-AMT32E) cannot be used to control the group of the Air to Air Heat Exchangers. Only on/off operation is available for RBC-AMS41E.
E Central control system (When controlling the air conditioner and the Air to Air Heat Exchanger separately) 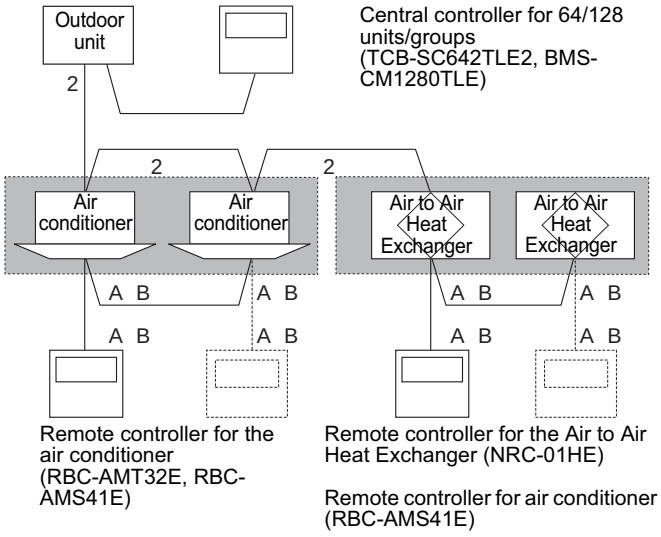 	• The central controller can be used to ON/OFF the whole system and separately ON/OFF groups of air conditioners and the Air to Air Heat Exchangers. (Air conditioners and Air to Air Heat Exchangers are not linked in this system.) • The central controller cannot be used to control the ventilation fan speed or ventilation mode of the Air to Air Heat Exchanger. • The operation of the central controller overrides that of the remote controllers for the Air to Air Heat Exchangers and the air conditioners. However, the operation of the remote controller for the Air to Air Heat Exchanger does not affect that of the remote controller for the air conditioner and vice versa. • The remote controller for the Air to Air Heat Exchanger (NRC-01HE) can be used to control the group of the air conditioners instead of using the remote controller for the air conditioner. • The remote controller for the Air to Air Heat Exchanger (NRC-01HE) can be used to control the ventilation fan speed and ventilation mode of the group of the Air to Air Heat Exchangers. * The remote controllers for the air conditioners (RBC-AMT32E) cannot be used to control the group of the Air to Air Heat Exchangers. Only on/off operation is available for RBC-AMS41E.
F Central control system (When controlling the air conditioner and Air to Air Heat Exchanger together) 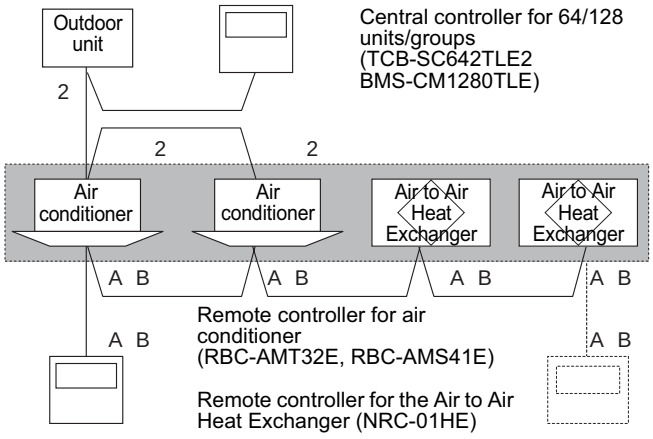 	• The central controller can be used to ON/OFF the whole system. It can also be used to ON/OFF the Air to Air Heat Exchanger separately (*). • The central controller cannot be used to control the ventilation fan speed or ventilation mode of the Air to Air Heat Exchanger. • If three control devices are used; the central controller and the remote controllers for the Air to Air Heat Exchanger and the air conditioner, the latter operation overrides the former regardless of which device is used. • The remote controller for the Air to Air Heat Exchanger NRC-01HE can be used to control the ventilation fan speed and ventilation mode of the Air to Air Heat Exchanger. • If the remote controller for the air conditioner (RBC-AMT32E and RBC-AMS41E) is used; the ventilation fan speed or ventilation mode of the Air to Air Heat Exchanger can not be controlled. • The remote controller for the air conditioner or the Air to Air Heat Exchanger can be used to ON/OFF the Air to Air Heat Exchanger separately. * Setting modifications are required for separate control. Refer to “11 Advanced Control” on page 124.

		Air to Air Heat Exchanger system		Air to Air Heat Exchanger system linked with air conditioners	
System example		A	B	—	C
Central control		None			
No. of Air to Air Heat Exchangers		1	Multiple	1	Multiple
Operation together with the air conditioners		No		Yes	
Remote controller inter-unit wiring		Not necessary	Necessary		
Central control wiring		Not necessary			
Circuit board of the Air to Air Heat Exchanger	1. Line (system) address	Fixed * The line (system) address is fixed as 31 for the Air to Air Heat Exchanger.			
	2. Changing the indoor unit address No.1 to 4 of SW702 No.1 and 2 of SW703	Not necessary Factory default: 1	Necessary No duplication Factory default: 1	Not necessary Factory default: 1	Necessary No duplication Factory default: 1
	3. Changing the group address No.4 of SW703	Necessary Header (Individual): ON	Necessary Header: ON (1unit) Follower: OFF (the other units) * Settings of the header unit reflect the indications of the remote controller.	Not necessary Follower: OFF (all units) * Settings of the follower unit with the smallest indoor unit address number reflect the indication of the remote controller.	
	4. Fix/Automatic changeover of the central control address No.3 of SW703	Not necessary			
	5. Changing the terminator No.1 of SW301	Not necessary None: OFF			
Checking before turning on the power		Complete the settings of the Air to Air Heat Exchanger and wiring.		• Complete the settings of the Air to Air Heat Exchanger and wiring. • Refer to the Installation Manual of the air conditioner for the settings and wiring.	
Turning on the power		Turn on the breaker of all the Air to Air Heat Exchangers.		Turn on the Air to Air Heat Exchanger first. Refer to the Installation Manual of the air conditioner for its power supply.	
Central control address setting		Not necessary			

		Central control system				
System example		D	—	E	—	F
Central control		One Air to Air Heat Exchanger is used.	When controlling the air conditioner and the Air to Air Heat Exchanger separately		When controlling the air conditioner and Air to Air Heat Exchanger together	
No. of Air to Air Heat Exchangers		Multiple	1	Multiple	1	Multiple
Operation together with the air conditioners		No			Yes	
Remote controller inter-unit wiring		Necessary	Not necessary	Necessary		
Central control wiring		Necessary (Header unit only)			Not necessary	
Circuit board of the Air to Air Heat Exchanger	1. Line (system) address	Fixed * The line (system) address is fixed as 31 for the Air to Air Heat Exchanger.				
	2. Changing the indoor unit address No.1 to 4 of SW702 No.1 and 2 of SW703	Necessary No duplication Factory default: 1	Not necessary Factory default: 1	Necessary No duplication Factory default: 1	Not necessary Factory default: 1	Necessary No duplication Factory default: 1
	3. Changing the group address No.4 of SW703	Necessary Header: ON (1unit) Follower: OFF (the other units) * Settings of the header unit reflect the indications of the remote controller.	Necessary Header (Individual): ON	Necessary Header: ON (1unit) Follower: OFF (the other units) * Settings of the header unit reflect the indications of the remote controller.	Not necessary Follower: OFF (all units) * Settings of the follower unit with the smallest indoor unit address number reflect the indication of the remote controller.	
	4. Fix/Automatic changeover of the central control address No.3 of SW703	Not necessary Auto: OFF *Refer to the Installation Manual of the central control device.				
	5. Changing the terminator No.1 of SW301	Necessary 100Ω: ON (1 header unit only)	Not necessary OFF * Adjust settings on the air conditioner.			
Checking before turning on the power		Complete the settings of the Air to Air Heat Exchanger and wiring.	• Complete the settings of the Air to Air Heat Exchanger and wiring. • Refer to the Installation Manual of the air conditioner for the settings and wiring.			
Turning on the power		Turn on the breaker of all the Air to Air Heat Exchangers.	Turn on the Air to Air Heat Exchanger first. Refer to the Installation Manual of the air conditioner for its power supply.			
Central control address setting		Refer to the Installation Manual of the central control device.				

■ Changing the group address, indoor unit address, and central control address

◆ About the switches on the circuit board of the Air to Air Heat Exchanger

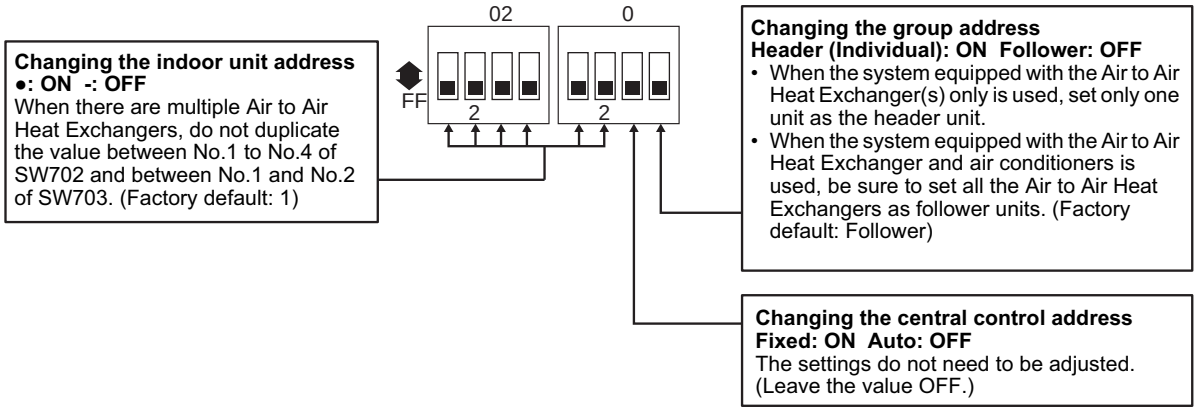

Indoor unit address switch (●: ON —: OFF)

Address	Address switch number						Address	Address switch number						Address	Address switch number						Address	Address switch number					
	SW702				SW703			SW702				SW703			SW702				SW703			SW702				SW703	
	1	2	3	4	1	2		1	2	3	4	1	2		1	2	3	4	1	2		1	2	3	4	1	2
1	—	—	—	—	—	—	17	—	—	—	—	●	—	33	—	—	—	—	—	●	49	—	—	—	—	●	●
2	●	—	—	—	—	—	18	●	—	—	—	●	—	34	●	—	—	—	—	●	50	●	—	—	—	●	●
3	—	●	—	—	—	—	19	—	●	—	—	●	—	35	—	●	—	—	—	●	51	—	●	—	—	●	●
4	●	●	—	—	—	—	20	●	●	—	—	●	—	36	●	●	—	—	—	●	52	●	●	—	—	●	●
5	—	—	●	—	—	—	21	—	—	●	—	●	—	37	—	—	●	—	—	●	53	—	—	●	—	●	●
6	●	—	●	—	—	—	22	●	—	●	—	●	—	38	●	—	●	—	—	●	54	●	—	●	—	●	●
7	—	●	●	—	—	—	23	—	●	●	—	●	—	39	—	●	●	—	—	●	55	—	●	●	—	●	●
8	●	●	●	—	—	—	24	●	●	●	—	●	—	40	●	●	●	—	—	●	56	●	●	●	—	●	●
9	—	—	—	●	—	—	25	—	—	—	●	●	—	41	—	—	—	●	—	●	57	—	—	—	●	●	●
10	●	—	—	●	—	—	26	●	—	—	●	●	—	42	●	—	—	●	—	●	58	●	—	—	●	●	●
11	—	●	—	●	—	—	27	—	●	—	●	●	—	43	—	●	—	●	—	●	59	—	●	—	●	●	●
12	●	●	—	●	—	—	28	●	●	—	●	●	—	44	●	●	—	●	—	●	60	●	●	—	●	●	●
13	—	—	●	●	—	—	29	—	—	●	●	●	—	45	—	—	●	●	—	●	61	—	—	●	●	●	●
14	●	—	●	●	—	—	30	●	—	●	●	●	—	46	●	—	●	●	—	●	62	●	—	●	●	●	●
15	—	●	●	●	—	—	31	—	●	●	●	●	—	47	—	●	●	●	—	●	63	—	●	●	●	●	●
16	●	●	●	●	—	—	32	●	●	●	●	●	—	48	●	●	●	●	—	●	64	●	●	●	●	●	●

■ Installing two remote controllers for the Air to Air Heat Exchanger

For details on how to install the remote controller for the Air to Air Heat Exchanger, refer to the Installation Manual accessory with the remote controller.

One or multiple Air to Air Heat Exchanger(s) can be controlled by using two remote controllers. (Up to two remote controllers can be installed.)

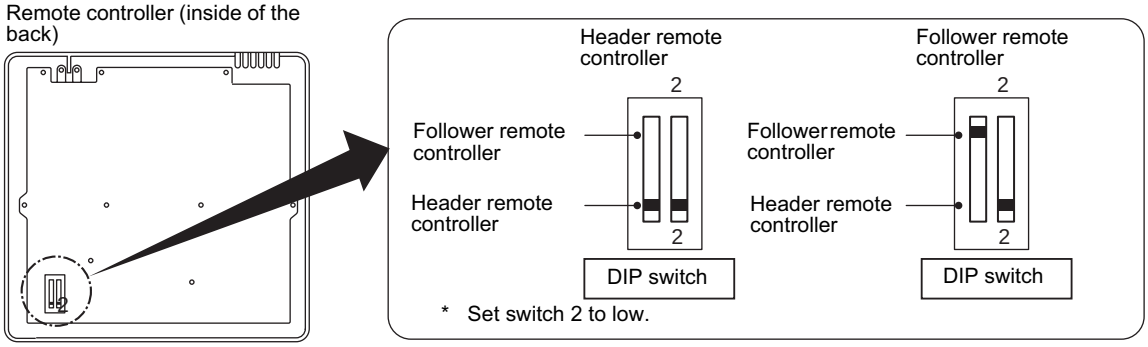

How to install

To use two remote controllers, follow the procedure below.

1. Set one remote controller as the header (factory default).
2. Set the other remote controller as the follower using the DIP switch. After that, the remote controller works as the follower.

■ Settings for each system configuration

NOTE

- **The line (system) address is fixed as 31 for the Air to Air Heat Exchanger.**

A Air to Air Heat Exchanger system (One Air to Air Heat Exchanger is used.)

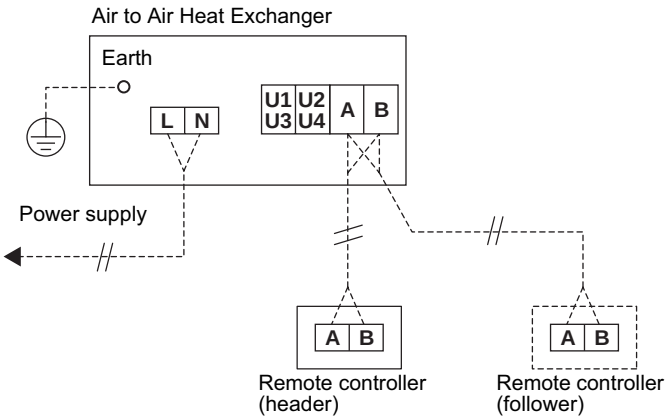

Changing the group address (No.4 of SW703)

Settings for changing the group address are necessary. Select “Header: ON”. (Factory default: Follower)

* When “Header: ON” is selected, “Individual: ON” will be selected in this system.

Changing the indoor unit address (No.1 to 4 of SW702, No.1 and 2 of SW703)

The setting does not need to be adjusted. (Factory default: 1)

B Air to Air Heat Exchanger system (Multiple Air to Air Heat Exchangers are used.)

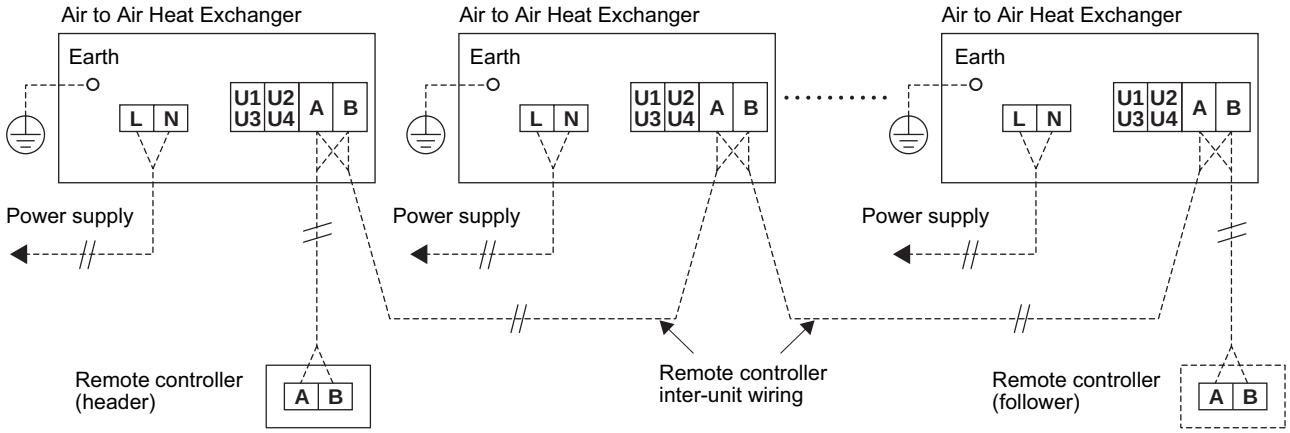

* For group control, install remote controller inter-unit wiring between the units.
* Up to 8 units can be installed for group control.

Changing the group address (No.4 of SW703)

Settings for changing the group address are necessary. Select “Header: ON” for only one unit. Select “Follower” for the other units.

* Settings of the header unit reflect the indications of the remote controller. (Factory default: Follower)

Changing the indoor unit address (No.1 to 4 of SW702, No.1 and 2 of SW703)

Settings for changing the indoor unit address are necessary. Do not duplicate the value. (1 to 64)

* The header unit does not need to be selected as “1”. (Factory default: 1)

C Air to Air Heat Exchanger system linked with air conditioners

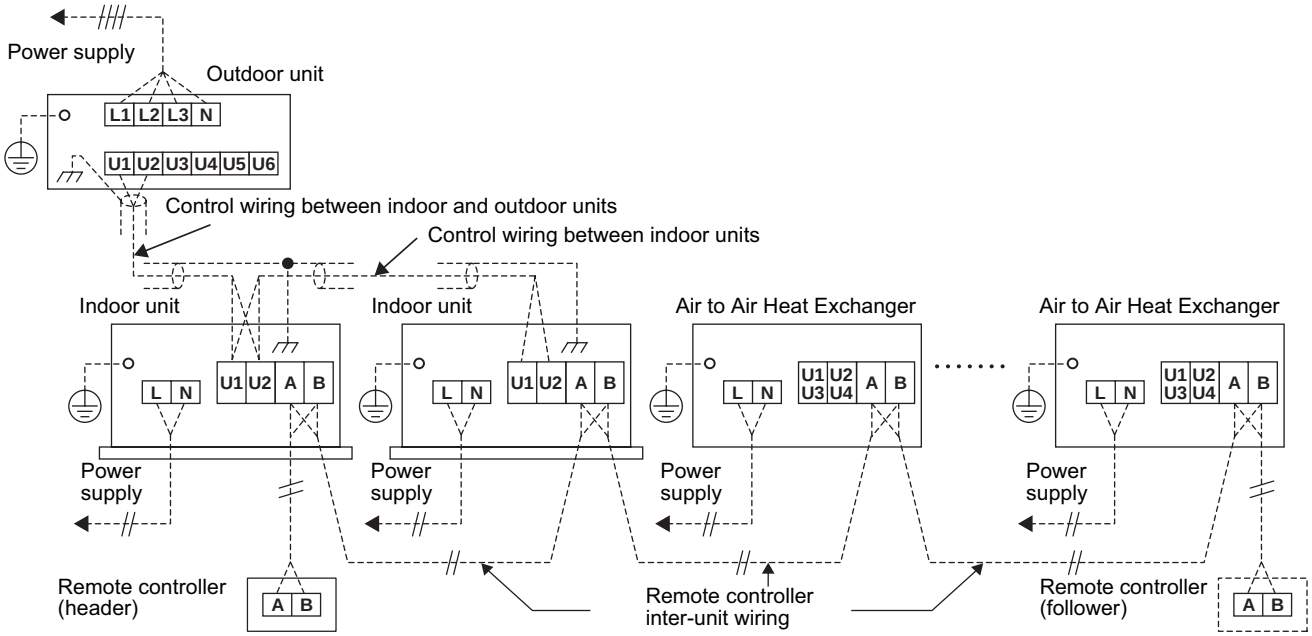

* For group control with air conditioners, install inter-unit wiring between the units.
* Up to 8 units can be installed for group control.

Changing the group address (No.4 of SW703)

The settings of the group address does not need to be adjusted. Leave the value “Follower: OFF”. (Factory default: Follower)

* Settings of the follower unit with the smallest indoor unit address number reflect the indication of the remote controller.

Changing the indoor unit address (No.1 to 4 of SW702, No.1 and 2 of SW703)

Settings for changing the indoor unit address are necessary. Do not duplicate the value. (1 to 64) (Factory default: 1)

D Central control system (When controlling the Air to Air Heat Exchanger only)

For the settings of the central control address, refer to the Installation Manual of the central control device.

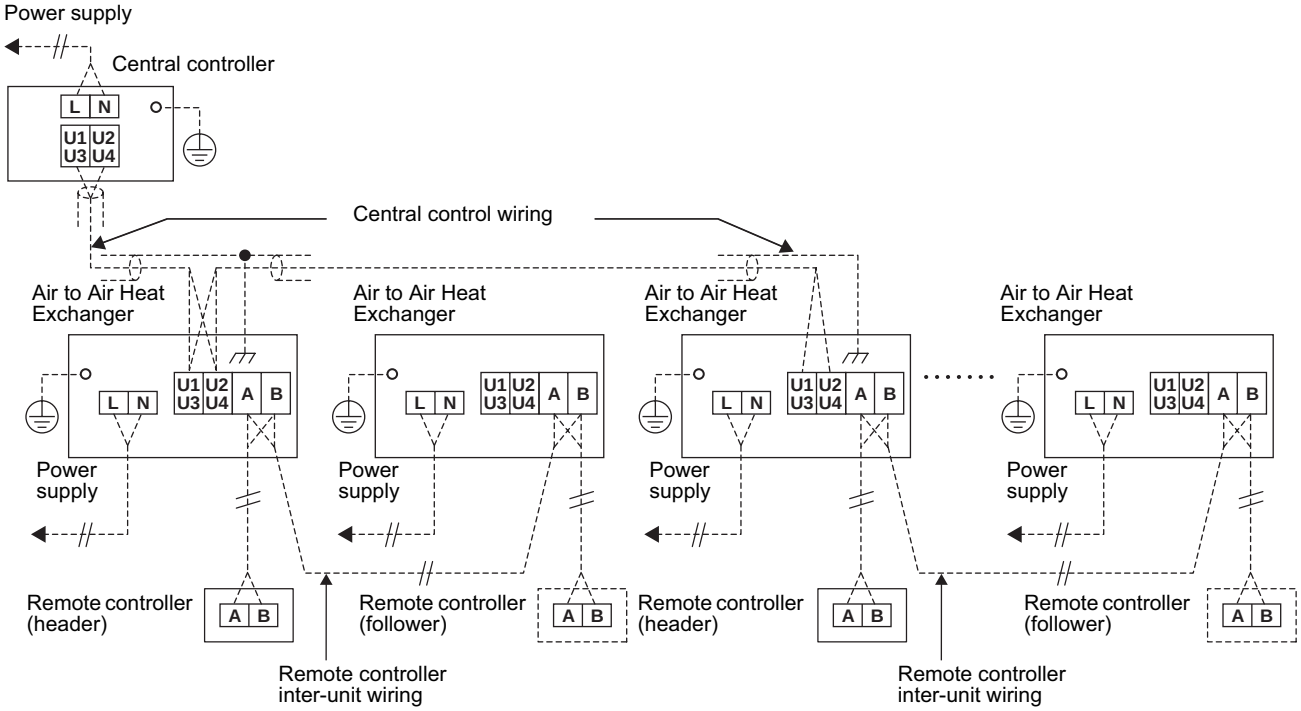

* Central control wiring must be connected to the header Air to Air Heat Exchanger unit only.
* For group control, install inter-unit wiring between the units.
* Up to 8 units can be installed for group control.

Changing the group address (No.4 of SW703)

Settings for changing the group address are necessary. Select “Header: ON” on the header unit of each group which central control wiring is connected to. Select “Follower” for the other units.

* Settings of the header unit reflect the indications of the remote controller. (Factory default: Follower)

Changing the indoor unit address (No.1 to 4 of SW702, No.1 and 2 of SW703)

Settings for changing the indoor unit address are necessary. Do not duplicate the value. (1 to 64)

* The header unit does not need to be selected as “1”. (Factory default: 1)

Changing the terminator (No.1 of SW301)

Settings for changing the terminator are necessary. Select “ON” for one of the header unit. (Factory default: OFF)

100Ω: ON (1 header unit only)
None: OFF (the other units)

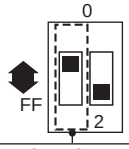

Changing the terminator
100Ω: ON
None: OFF
(Factory default: OFF)

Ⓔ Central control system (When controlling the air conditioner and the Air to Air Heat Exchanger separately)

For the settings of the central control address, refer to the Installation Manual of the central control device.

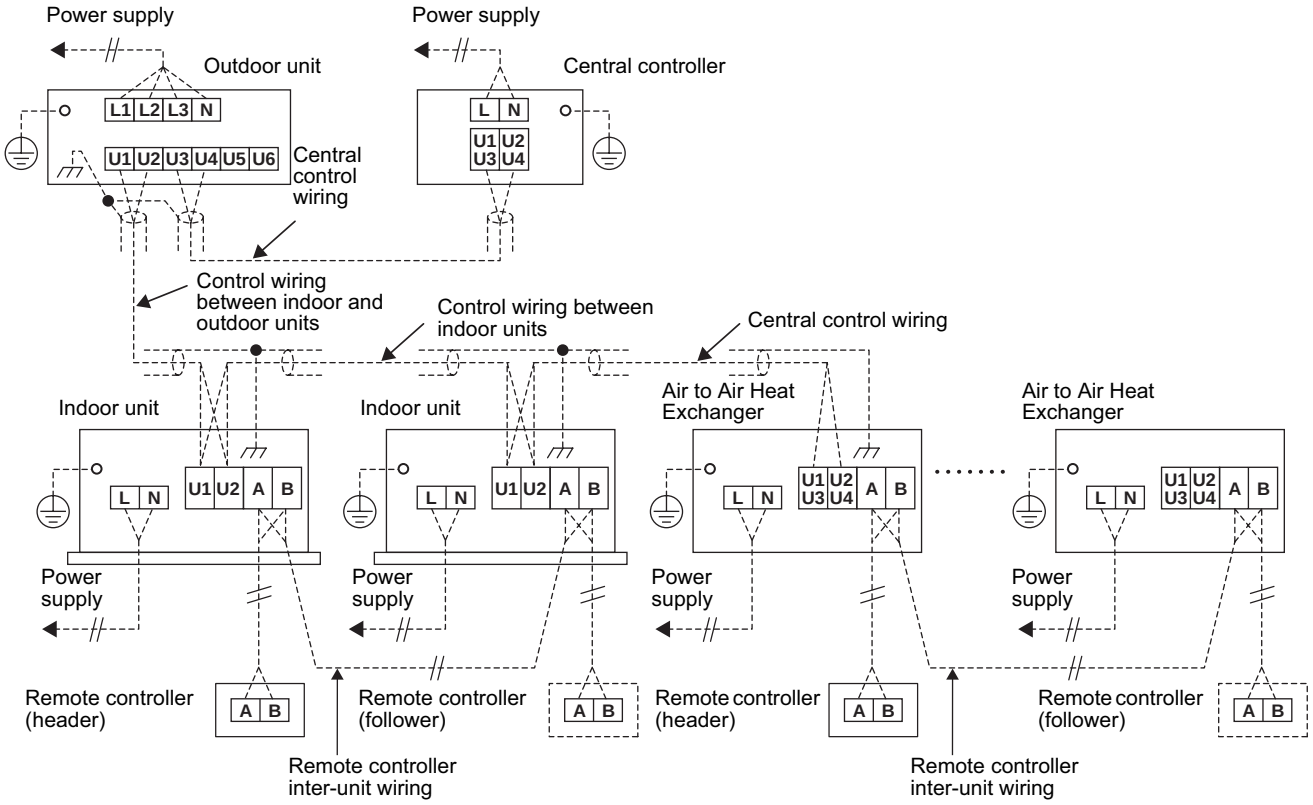

* Central control wiring of the Air to Air Heat Exchanger is necessary only for the header unit.
* For group control, install inter-unit wiring between the units.
* Up to 8 units can be installed for group control.

Changing the group address (No.4 of SW703)

Settings for changing the group address are necessary. Select “Header: ON” on the header unit of each group which central control wiring is connected to. Select “Follower” for the other units.

* When “Header: ON” is selected, “Individual: ON” will be selected if only one Air to Air Heat Exchanger is connected to this system.

* Settings of the header unit reflect the indications of the remote controller. (Factory default: Follower)

Changing the indoor unit address (No.1 to 4 of SW702, No.1 and 2 of SW703)

Settings for changing the indoor unit address are necessary. Do not duplicate the value. (1 to 64)

* The header unit does not need to be selected as “1”. (Factory default: 1)

Changing the terminator (No.1 of SW301)

* The settings do not need to be adjusted.

F Central control system (When controlling the air conditioner and Air to Air Heat Exchanger together)

- For the settings of the central control address, refer to the Installation Manual of the central control device.
- Do not perform the central control wiring with the Air to Air Heat Exchanger.

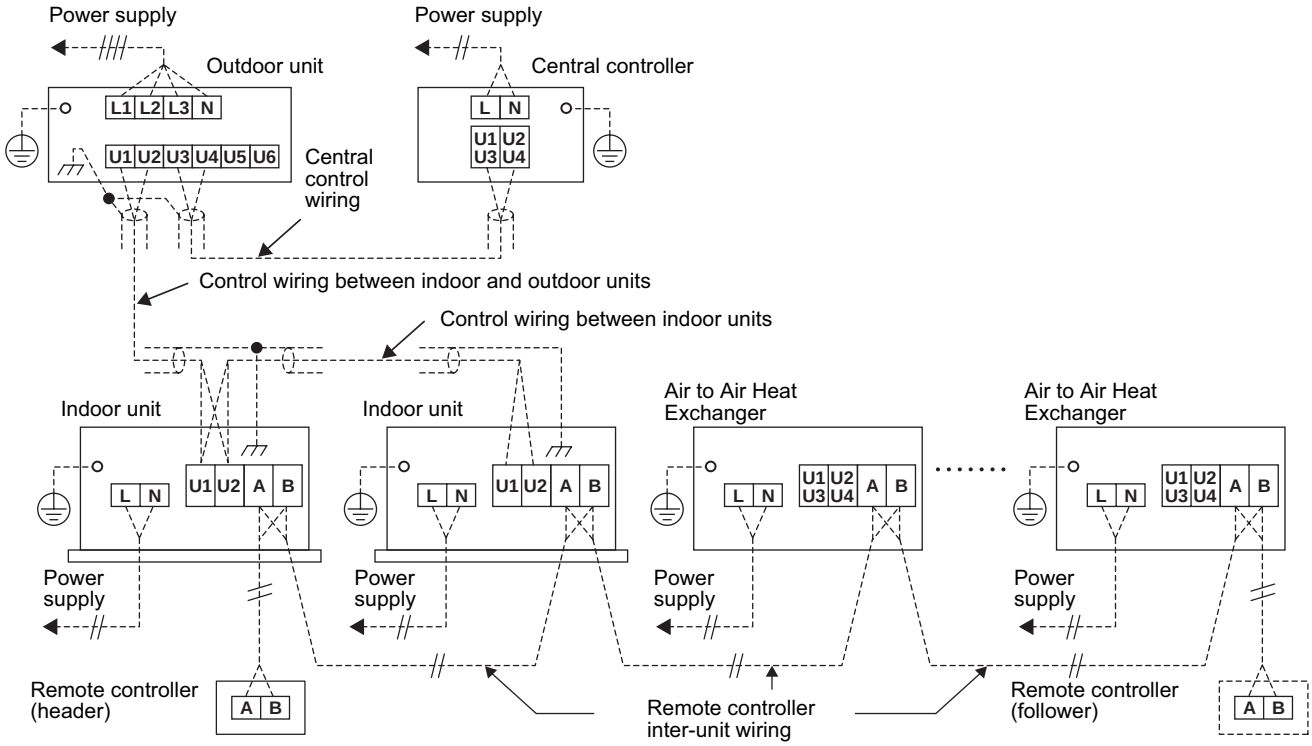

* For group control with air conditioners, perform inter-unit wiring between the units.
* Up to 8 units can be installed for group control.

Changing the group address (No.4 of SW703)

The settings of the group address does not need to be adjusted. Leave the value “Follower: OFF”. (Factory default: Follower)

* The settings of the follower unit with the smallest indoor unit address number reflect the indication of the remote controller.

Changing the indoor unit address (No.1 to 4 of SW702, No.1 and 2 of SW703)

Settings for changing the indoor unit address are necessary. Do not duplicate the value. (1 to 64) (Factory default: 1)

Changing the terminator (No.1 of SW301)

* The settings do not need to be adjusted.

10 Advanced System

⚠ WARNING

- Use wiring that meets the specifications in the Installation Manual and the stipulations in the local regulations and laws. Use of wiring which does not meet the specifications may give rise to electric shocks, electrical leakage, smoking and/or a fire.
- When carrying out electric connection, use the wire specified in the Installation Manual and connect and fix the wire securely to prevent them applying external force to the terminals. Improper connection of fixing may result in fire.
- Electrical wiring work shall be conducted according to law and regulation in the community and Installation Manual. Failure to do so may result in electrocution or short circuit.

REQUIREMENT

For the connecting procedure and electric wiring of External Input (sold separately), refer to the Installation Manual of Remote On/Off Adapter NRB-1HE.

1 When the operation is linked by a signal from an external device or remotely controlled On and Off. (Separately sold External Input)

REQUIREMENT

Do not change the setting of the Air to Air Heat Exchanger single operation for Air to Air Heat Exchangersystem linked with air conditioners on page 128.

* Operating together if a command is sent to one of the units in the group.
* Setting for linked operation with external devices can be changed. Refer to the “Setting for linked operation with external devices” on page 130.

- **When a remote controller is used with the Air to Air Heat Exchanger**
  The latter operation of the remote controller or the switch of the external device overrides the former. (Single operation of Air to Air Heat Exchanger is possible.)
- **When no remote controller is used with the Air to Air Heat Exchanger**
  The operation of the Air to Air Heat Exchanger is confined to that together with the external device. (Single operation of Air to Air Heat Exchanger is not possible.)

1) When the output signal of the external device is DC12V or DC24V (static signal)

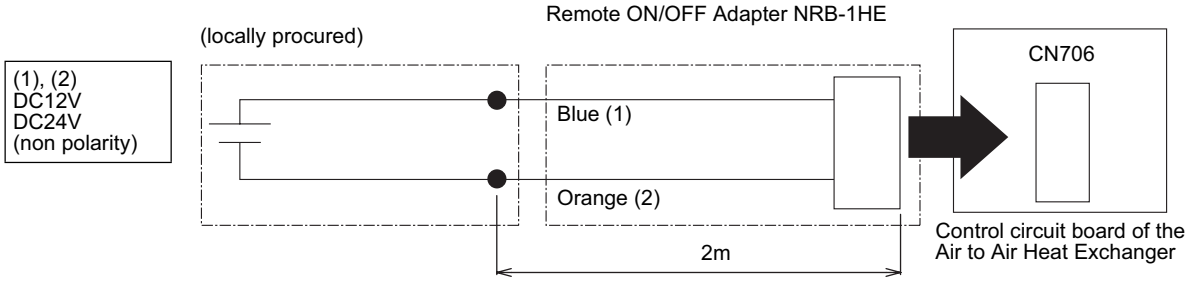

- Transmission wire used to extend must be locally procured: Non-polarity, 2-core wire 0.5mm^2
  Maximum length: Refer to the external device’s manual.
- Insert the Remote ON/OFF Adapter NRB-1HE (sold separately) into connector CN706 (2P).
- If a command is sent to one of the units in the group, all the air conditioners and the Air to Air Heat Exchanger operate together.

2) When the output signal of the external device is a no voltage a-contact (static signal)

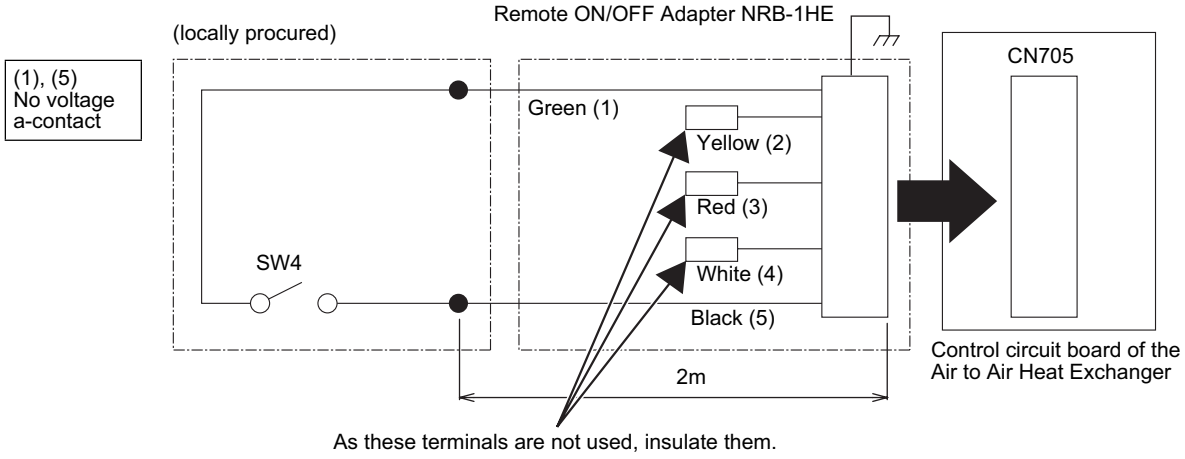

Running when SW4 is closed, and stopped when it is open.

- Transmission wire used to extend must be locally procured: Non-polarity, shielded wire (H05 VVC4V5-K or 60227 IEC 74) 0.5mm^2
  Maximum length: 50m
- Insert the Remote ON/OFF Adapter NRB-1HE (sold separately) into connector CN705 (5P).
- If a command is sent to one of the units in the group, all the air conditioners and the Air to Air Heat Exchanger operate together.

If a polar contact such as a photocoupler is used with a no voltage a contact, connect the positive pole to terminal (5), and the negative pole to terminal (1).	Specification of the external contact: Contact for microcurrent DC12V 1mA

2 Operating together with a pulse transmission device such as a building management system (separately sold External Input)

1) Select "Pulse: ON" for No.1 of SW701 (Changeover switch for pulse/static). (Factory default: "Static")

2) Insert the Remote ON/OFF Adapter NRB-1HE (sold separately) into connector CN705 or CN706. (For the input signal, refer to of "1).When the output signal of the external device is DC12V or DC24V (static signal)" or "2).When the output signal of the external device is a no voltage a-contact (static signal)" above.

* The pulse width should be 200msec or more.

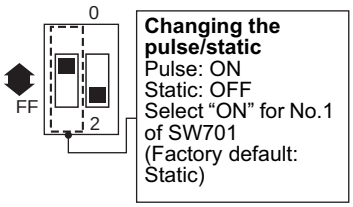

3 Switching the remote controller between invalid/valid, low/high, or Bypass mode/Heat exchange mode from an external device (separately sold External Input)

* Perform connection with one of the units in the group.

* Static signal only

Insert the Remote ON/OFF Adapter NRB-1HE (sold separately) into connector CN705.

- Transmission wire used to extend must be locally procured: Non-polarity, shielded wire (H05 VVC4V5-K or 60227 IEC 74) 0.5mm^2
  Maximum length: 50m

If a polar contact such as a photocoupler is used with a no voltage a-contact, connect the positive pole to terminal (2), (3), or (4), and the negative pole to terminal (1).	Specification of the external contact: Contact for microcurrent DC12V 1mA

1) When switching the remote controller between invalid/valid from an external device

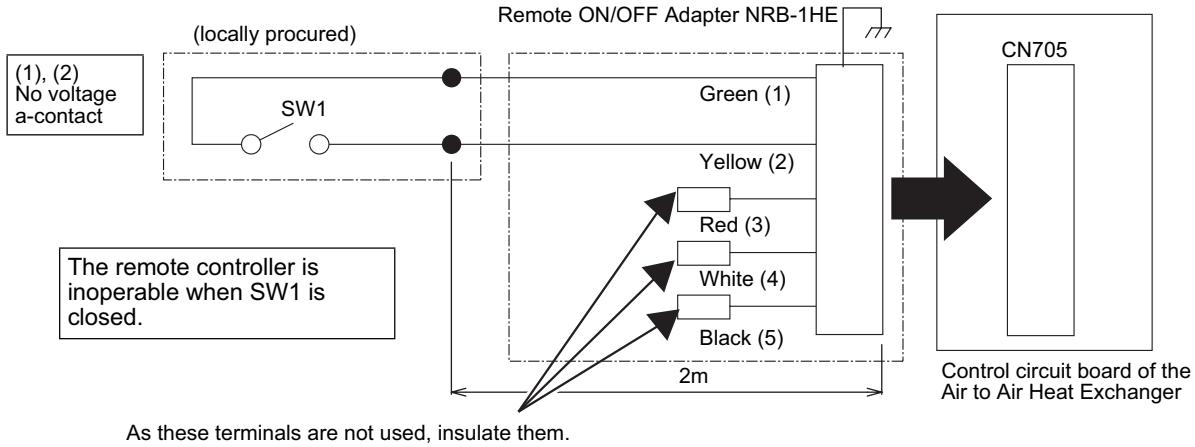

SW1 [Remote controller Invalid: ON, Valid: OFF]

- For NRC-01HE (remote controller for the Air to Air Heat Exchanger), when one of the buttons below is pressed, blinks and the operation is invalid.
  - * [ON/OFF] button
  - * [VENT] button
  - * [VENT MODE] button
  - * [VENT FAN] button
- For RBC-AMT32E, AMS41E (remote controller for the air conditioner), pressing the [ON/OFF] button has no effect.
- When the remote controller is inoperable, the 24-hour ventilation mode and nighttime heat purge operation are not available.
- If a command is sent to one of the units in the group, the invalid/valid setting of the remote controller in the group can be switched.

2) When switching between low/high from an external device

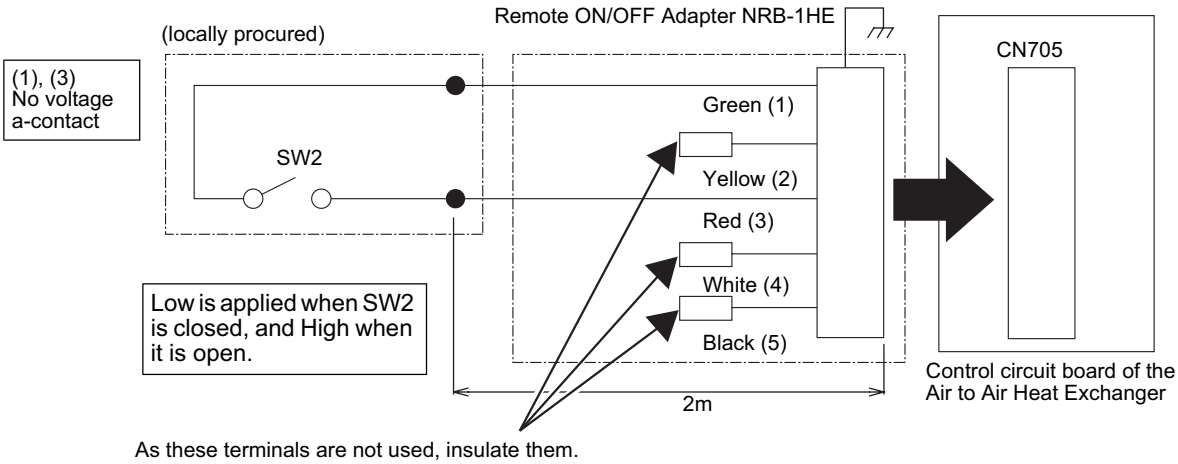

SW2 [Low: ON, High: OFF]

- For NRC-01HE (remote controller for the Air to Air Heat Exchanger), the message on the display is changed. However, when the air conditioner operates Air to Air Heat Exchanger system linked with air conditioners, ventilation fan speed (Low/High) is changed though the ventilation amount is not shown on the display.
- If a command is sent to one of the units in the group, all the Air to Air Heat Exchangers in the group operate together.
- The latter operation of the remote controller or the external device overrides the former.

3) When switching between Bypass mode/Heat exchange ventilation from an external device

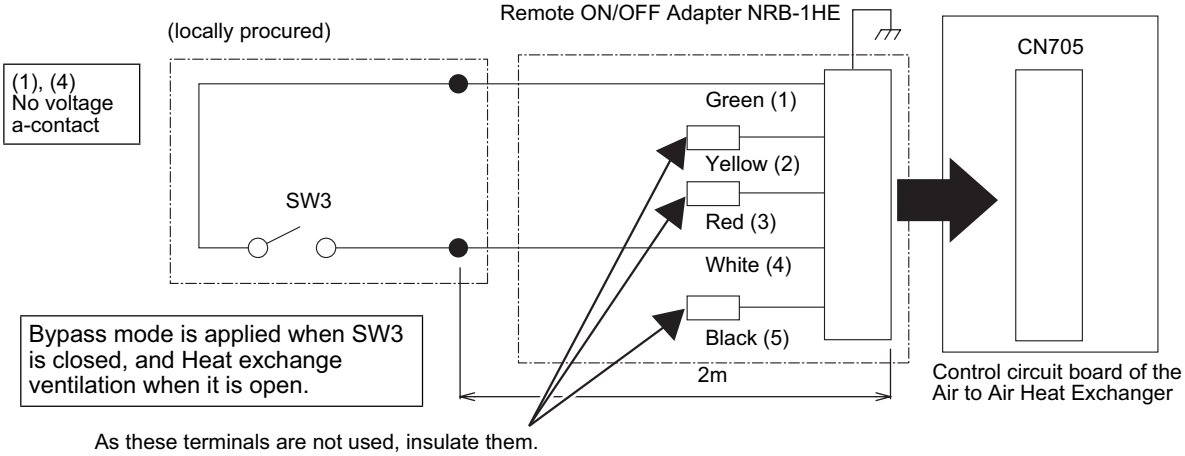

SW3 [Bypass mode ventilation: ON, Heat exchanging ventilation: OFF]

- For NRC-01HE (remote controller for the Air to Air Heat Exchanger), the message on the display is changed.
- If a command is sent to one of the units in the group, all the Air to Air Heat Exchangers in the group operate together.
- The latter operation of the remote controller or the external device overrides the former.

NOTE

The operation mode will be automatically changed to Heat exchange mode when outdoor air temperature is below 15°C during Bypass mode. The display remains Bypass mode.

4 Connecting an auxiliary fan or monitoring operation output (External Output)

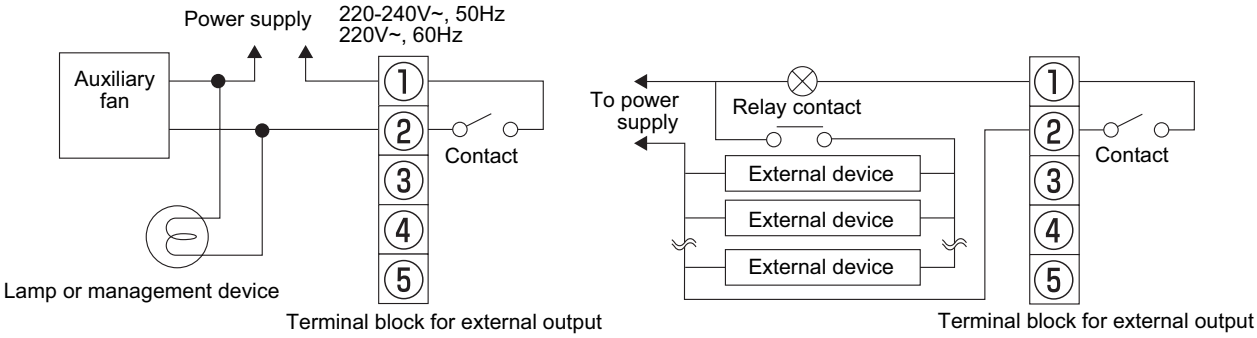

If external devices is used working at a higher voltage and current than the rated values, install a relay according to the diagram above.
Rated relay: 220-240VAC

Connect to the terminal block for external output (1 and 2) in the electrical control box

Connection wire (locally procured): 2-core wire (H07 RN-F or 60245 IEC 66) 1.0mm^2 to 2.5mm^2

Rated contact	
Maximum: 240VAC, 1A	24VDC, 1A
Minimum: 220VAC, 100mA	5VDC, 100mA

Contact is on during normal operation as factory default.

- Contact is off during 24-hour ventilation mode, nighttime heat purge operation, delay mode or cold mode (temperature is below -10°C) as factory default.
- The operation output settings can be changed. Refer to “Setting for changing the operation output” on page 131.

5 Connecting an electric damper (electric shutter) (External Output)

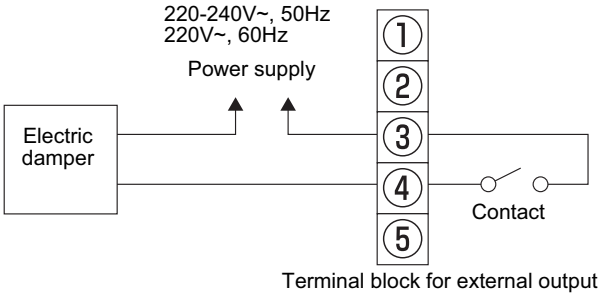

If external output is used working at a higher voltage and current than the rated values, install a relay according to the diagram above (diagram for connecting an auxiliary fan).
Rated relay: 220-240VAC

Connect to the terminal block for external output (3 and 4) in the electrical control box

Connection wire (locally procured): 2-core wire (H07 RN-F or 60245 IEC 66) 1.0mm² to 2.5mm²

Rated contact (3 to 5: Total value with abnormal signal output)	
Maximum: 240VAC, 1A	24VDC, 1A
Minimum: 220VAC, 100mA	5VDC, 100mA

The electric damper (electric shutter) works during normal operation, 24-hour ventilation mode, and nighttime heat purge operation.

- The electric damper (electric shutter) also works in the following circumstances:
  * While the operation is stopped intermittently in 24-hour ventilation mode
  * While the operation is paused during nighttime heat purge operation
  * While operating in cold mode (Temperature is below −10°C.)
- The electric damper (electric shutter) does not work in the following circumstances:
  * While the operation is stopped
  * Before the monitoring operation of nighttime heat purge operation starts
  * While in the delay mode

6 Monitoring an abnormal signal or the operation signal of bypass mode (External Output)

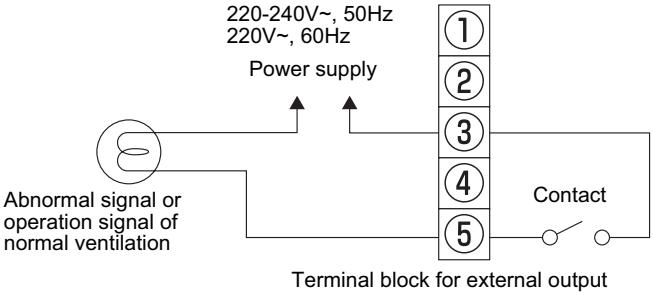

Connect to the terminal block for external output (3 and 5) in the electrical control box

Connection wire (locally procured): 2-core wire (H07 RN-F or 60245 IEC 66) 1.0mm² to 2.5mm²

Rated contact (3 and 4: Total value with output of the electric damper)	
Maximum: 240VAC, 1A	24VDC, 1A
Minimum: 220VAC, 100mA	5VDC, 100mA

It is possible to monitor an abnormal signal or the operation signal of bypass mode from the Air to Air Heat Exchanger.

Detection of an abnormal signal is possible, as factory default.

- To change settings so that the operation signal of bypass mode can be detected, refer to “Abnormal signal/ bypass mode signal output setting” on page 131.

11 Advanced Control

REQUIREMENT

- When the unit is used for the first time, it takes a while for the remote controller to recognize operation input after the power is turned on. This is not a malfunction.
- For details on the auto address setting of air conditioners when operating together with a SMMS series air conditioner (adjust the auto address setting on the circuit board of the outdoor interface), refer to the Installation Manual of the SMMS series air conditioner.
- For details on the auto address setting of air conditioners when operating together with a DI·SDI series air conditioner (the action is performed when the power is turned on), refer to the Installation Manual of the DI·SDI series air conditioner.
- Turn on the Air to Air Heat Exchanger first. Refer to the Installation Manual of the air conditioner about its power supply.

- When shipped from the factory, all the settings are set to [Factory default]. Change the settings of the Air to Air Heat Exchanger if necessary.
- Change settings using the main remote controller (wired remote controller).

* The settings cannot be changed using the wireless remote controller, the sub remote controller, or a system without a remote controller (system with only the central remote controller). Therefore, prepare the main remote controller and install it.

■ Changing the advanced control settings

Basic procedure for changing the settings

Change settings while the power is turned off. (Stop operation.)

⚠ CAUTION

Do not change any setting codes other than those in this manual; otherwise, the unit may not work or some problems may occur.

Changing the settings of the Air to Air Heat Exchanger (For NRC-01HE)

* For RBC-AMT32E, AMS41E, settings can be changed using the same procedure as NRC-01HE. (Display position is different from that of NRC-01HE.)

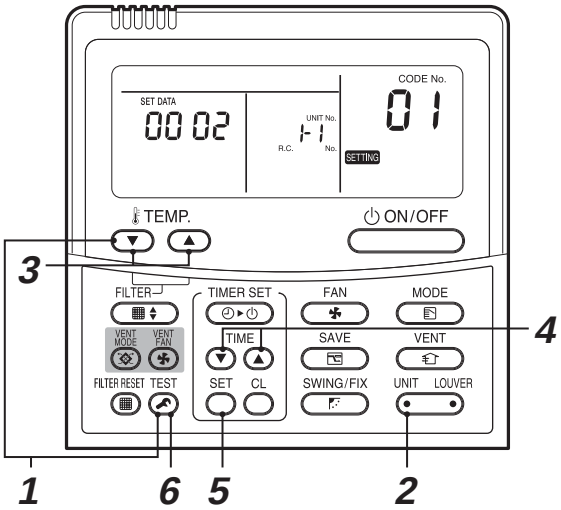

1 **Push TEST button and temp. ▼ button simultaneously for at least 4 seconds.**

After a while, the display flashes as shown in the figure.

Confirm that the CODE No. is [01].

- If the CODE No. is not [01], push TEST button to erase the display content, and repeat the procedure from the beginning.
  (No operation of the remote controller is accepted for a while after TEST button is pushed.)

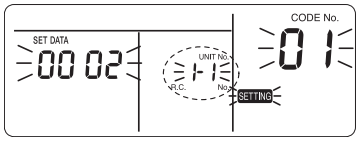

(* Display content varies with the indoor unit model.)

2 **Every time UNIT LOUVER (left side of the button) is pressed, the unit numbers of the indoor units or the Air to Air Heat Exchangers in the group are displayed successively. Select the Air to Air Heat Exchanger to change settings. When the unit is selected, the fan starts running to indicate the selected unit.**

* The unit number of the Air to Air Heat Exchanger is 31-OO. OO represents the indoor unit address specified with No.1 to No.4 of SW702 and No.1 and No.2 of SW703. For NRC-01HE, the ⇄ indicator lights up.

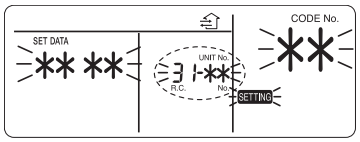

3 **Using TEMP. ▼ / ▲ buttons, specify CODE No. [✱✱].**

4 **Using TIMER time ▼ / ▼ buttons, select SET DATA [✳✳✳✳].**

5 **Push SET button. When the display changes from flashing to lit, the setup is completed.**

- To change settings of another indoor unit, repeat from Procedure ***2***.
- To change other settings of the selected indoor unit, repeat from Procedure ***3***.
  Use SET button to clear the settings.
  To make settings after SET button was pushed, repeat from Procedure ***2***.

6 **When settings have been completed, push TEST button to determine the settings.**

When TEST button is pushed, “SETTING” flashes and then the display content disappears and the air conditioner enters the normal stop mode.
(While “SETTING” is flashing, no operation of the remote controller is accepted.)

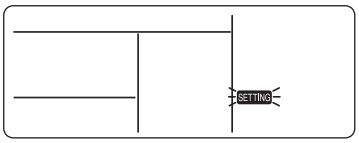

Codes (DN codes) for changing settings

Codes in the table below are necessary for local advanced control.

Code	Description	SET DATA and description	Factory default	Note
01	Lighting-up hours of the Filter Sign	0000: None 0001: 150 H 0002: 2500 H 0003: 5000 H 0004: 10000 H	0002: 2500 H	Adjusting this setting is necessary for the header unit.
28	Auto recovery from a power failure	0000: Invalid 0001: Valid * Resumes the status just before the power failure	0000: Invalid	*1
31	Single operation of the fan	0000: Invalid 0001: Valid ON/OFF operation for the Air to Air Heat Exchanger only	0000: Invalid	Adjusting this setting is necessary for the header unit. (System equipped with the Air to Air Heat Exchanger and air conditioners)
48	Imbalanced Fan speed ventilation	0000: Normal 0001: SA (High) > EA (Low) active 0002: SA (Low) < EA (High) active * “High” may be “Extra High”.	0000: Normal	Adjusting this setting is necessary for all the Air to Air Heat Exchangers in the group.
49	24-hour ventilation	0001: Invalid 0002: Valid	0001: Invalid	Adjusting this setting is necessary for all the Air to Air Heat Exchangers in the group.
4B	Delayed operation	0000: Invalid 0001-0006: [Setting valve] x 10 minutes delay * Delaying the Air to Air Heat Exchanger operation to reduce the air-conditioning load when starting running the air conditioner	0000: Invalid	Adjusting this setting is necessary for all the Air to Air Heat Exchangers in the group. (System equipped with the Air to Air Heat Exchanger and air conditioners)
4C	Nighttime heat purge	0000: Invalid 0001-0048: Start after [Setting value] x 1 hour(s) * Setting for the time before the nighttime heat purge operation starts	0000: Nighttime heat purge OFF	Adjusting this setting is necessary for all the Air to Air Heat Exchangers in the group. (System equipped with the Air to Air Heat Exchanger and air conditioners)
4D	Setting of the exhausting fan operation below −15°C (OA)	0000: Exhausting fan run 0001: Exhausting fan stop * The supplying fan stops when the temperature is below −15°C. (OA)	0000: Exhausting fan run	Adjusting this setting is necessary for all the Air to Air Heat Exchangers in the group.
4E	Setting of the linked operation with external devices	0000: ON/OFF linked 0001: ON linked 0002: OFF linked * Specifies whether the ON/OFF operation of the Air to Air Heat Exchanger is linked with the external device operation	0000: ON/OFF linked	Adjusting this setting is necessary for a Air to Air Heat Exchanger to which an adapter for remote ON/OFF control (sold separately) is connected.
EA	Changing the ventilation mode	0001: Bypass mode 0002: Heat Exchange mode 0003: Automatic mode * Compatible with systems without a remote controller and RBC-AMT32E	0003: Automatic mode	*1
EB	Changing the ventilation Fan speed	0002: High 0003: Low 0004: Imbalanced * “High” may be “Extra High”. * Compatible with systems without a remote controller and RBC-AMT32E	0002: High	*1

Code	Description	SET DATA and description	Factory default	Note
ED	Changing the operation output	0000: ON during normal operation 0001: ON during normal operation, 24-hour ventilation, or nighttime heat purge operation 0002: ON during 24-hour ventilation or nighttime heat purge operation 0003: ON when SA fan is running 0004: ON when EA fan is running	0000: ON during normal operation	Adjusting this setting is necessary for a Air to Air Heat Exchanger which transfers the operation output.
EE	Changing the abnormal signal/ Bypass mode signal output	0000: ON when an abnormal signal is detected 0001: ON when the Bypass mode signal is detected	0000: ON when an abnormal signal is detected	Adjusting this setting is necessary for a Air to Air Heat Exchanger which transfers the operation output.

* Adjusting this setting is necessary for the header unit when using a system equipped with the Air to Air Heat Exchanger only, and the Air to Air Heat Exchanger with the smallest indoor unit address number when using a system equipped with the Air to Air Heat Exchanger and air conditioners.

■ Changing the time before the Filter Sign lights up

The time before the Filter Sign lights up can be changed according to the installation conditions.

* Adjust this setting for the header unit.

- Select [01] in step 3 on page 124.
- Select a value from the table on the below in step 4 on page 125 according to the preferred time before the Filter Sign lights up.

Code	SET DATA	0000	0001	0002	0003	0004
01	Time before the Filter Sign lights up	None	150H	2500H (Factory default)	5000H	10000H

■ Setting of auto recovery from a power failure

Resumes the status just before the power failure.

* Adjusting this setting is necessary for the header unit when an Air to Air Heat Exchanger system is used, and the Air to Air Heat Exchanger with the smallest address number when an Air to Air Heat Exchanger system linked with air conditioners is used.

- Select [28] in step 3 on page 124.
- Select [0001] in step 4 on page 125.

Code	SET DATA	0000	0001
28	Auto recovery from a power failure	Invalid (Factory default)	Valid

■ Setting of the Air to Air Heat Exchanger single operation (Setting for the header air conditioner)

Single operation of the Air to Air Heat Exchanger is possible when operation of the Air to Air Heat Exchanger is linked with that of the air conditioners.
Use the button of the wired remote controller.

* While the Air to Air Heat Exchanger is in operation, VENT is displayed on the remote controller.
* Adjust this setting for the header air conditioner in the group when an Air to Air Heat Exchanger system linked with air conditioners is used.
* This setting is invalid when an Air to Air Heat Exchanger(s) system is used.
  - Select [31] in step 3 on page 124.
  - Select [0001] in step 4 on page 125.

Code	SET DATA	0000	0001
31	Single operation of the fan	Invalid (Factory default)	Valid

REQUIREMENT

Do not change this setting when the operation is linked by a signal from an external device or remotely controlled on and off (page 119) by using Remote ON/OFF Adapter NRB-1HE (sold separately).

■ Setting of the imbalanced ventilation Fan speed

SA/EA imbalanced operation of the Air to Air Heat Exchanger is possible.
Use the VENT FAN button of the remote controller.

* Adjust this setting for all the Air to Air Heat Exchangers when group operation is applied.
* Though RBC-AMT32E, RBC-AMS41E cannot be used, this setting can still be changed. For details, refer to “Ventilation Fan speed setting” on page 130.
  - Select [48] in step 3 on page 124.
  - Select [0001: SA (High) > EA (Low) active] or [0002: SA (Low) < EA (High) active] in step 4 on page 125.

Code	SET DATA	0000	0001	0002
48	Imbalanced ventilation Fan speed	Invalid (Factory default)	SA (High) > EA (Low) active	SA (Low) < EA (High) active

■ Setting of 24-hour ventilation

24-hour ventilation (intermittent operation of Low mode) is possible.

* Adjust this setting for all the Air to Air Heat Exchangers in the group.
* The air volume of ventilation is half as much as that of Low mode (Ventilated at 60-minute intervals)
* When 24-hour ventilation is in operation, the 24-hour ventilation indicator is not displayed on RBC-AMT32E, RBC-AMS41E.
  - Select [49] in step 3 on page 124.
  - Select [0001] in step 4 on page 125.

Code	SET DATA	0000	0001
49	24-hour ventilation	Invalid (Factory default)	Valid

■ Setting of delayed operation (Delayed operation of the Air to Air Heat Exchanger when it operates link with air conditioners)

The operation of the Air to Air Heat Exchanger is delayed by [Setting value] x 10 minutes (10 to 60 minutes) when the [ON/OFF] button is pressed. (Available when the operation of the Air to Air Heat Exchanger is linked with that of air conditioners)

* Adjust this setting for all the Air to Air Heat Exchangers in the group. (Only when the Air to Air Heat Exchanger(s) operates together with air conditioners)
* This setting is invalid for a system equipped with the Air to Air Heat Exchanger only.
* For NRC-01HE, the indicator lights up.
  - Select [4B] in step 3 on page 124.
  - Select a value from the table on the below in step 4 on page 125 according to the preferred time.

Code	SET DATA	0000	0001 to 0006
4B	Delayed operation	Invalid (Factory default)	[Setting value] x 10 minutes delay

■ Nighttime heat purge setting

Nighttime heat purge exhausts hot air in the room by bypass mode and reduces the cooling load in the morning. Monitoring operation starts after [Setting value] x 1 hour(s). (1 to 48 hours)

* Adjust this setting for all the Air to Air Heat Exchangers in the group. (Only when the Air to Air Heat Exchanger(s) operates link with air conditioners)
* This setting is invalid for an Air to Air Heat Exchanger system.
  - Select [4C] in step 3 on page 124.
  - Select a value from the table on the below in step 4 on page 125 according to the preferred time.

Code	SET DATA	0000	0001 to 0048
4C	Nighttime heat purge	0000: Invalid (Factory default)	Start after [Setting value] x 1 hour(s)

■ Setting for operation of the exhausting fan below −15°C

Stops the exhausting fan when the temperature outside falls below −15°C

* Adjust this setting for all the Air to Air Heat Exchangers in the group.
* The air supplying fan stops regardless of this setting.
* When the indoor temperature is over 26°C, the exhausting fan stops even when the outdoor temperature is higher than -15°C.
  - Select [4D] in step 3 on page 124.
  - Select [0001] in step 4 on page 125.

Code	SET DATA	0000	0001
4D	Exhausting fan operation below −15°C	Exhausting fan runs (Factory default)	Exhausting fan stops

■ Setting for linked operation with external devices

Specifies the operation of the Air to Air Heat Exchanger linked with the on/off operation of external devices

* For group operation, adjust this setting for the Air to Air Heat Exchanger to which the Remote ON/OFF Adapter (NRB-1HE: sold separately) is connected.
  - Select [4E] in step 3 on page 124.
  - Select a value from the table on the below in step 4 on page 125.

Code	SET DATA	0000	0001	0002
4E	Linked operation with external devices	ON/OFF linked (Factory default)	ON linked	OFF linked

0000: The Air to Air Heat Exchanger starts/stops together with the starting/stopping of an external device. (The latter operation of the remote controller or the switch of the external device overrides the former.)
0001: The Air to Air Heat Exchanger starts together with the starting of an external device. Use the remote controller to stop operation.
0002: The Air to Air Heat Exchanger stops together with the stopping of an external device. Use the remote controller to start operation.

■ Ventilation mode setting

The setting of the ventilation mode can be changed when the remote controller for air conditioners (RBC-AMT32E, RBC-AMS41E) or a system without a remote controller is used.

* Adjusting this setting is necessary for the header unit when an Air to Air Heat Exchanger system is used (RBC-AMT32E can not be used.), and for the Air to Air Heat Exchanger with the smallest address number when an Air to Air Heat Exchanger system linked with air conditioners is used.
* When the remote controller NRC-01HE is installed, this setting is invalid. (The remote controller can be used for operation.)
  - Select [EA] in step 3 on page 124.
  - Select a value from the table on the below in step 4 on page 125.

Code	SET DATA	0000	0001	0002
EA	Changing the ventilation mode	Bypass mode	Heat Exchange mode	Automatic mode (Factory default)

■ Ventilation Fan speed setting

The setting of the ventilation Fan speed can be changed when the remote controller for air conditioners (RBC-AMT32E, RBC-AMS41E) or the system without the remote controller is used.

* Adjusting this setting is necessary for the header unit when an Air to Air Heat Exchanger system is used (RBC-AMT32E can not be used.), and for the Air to Air Heat Exchanger with the smallest address number when an Air to Air Heat Exchanger system linked with air conditioners is used.
* When the remote controller NRC-01HE is installed, this setting is invalid. (The remote controller can be used for operation.)
  - Select [EB] in step 3 on page 124.
  - Select a value from the table on the below in step 4 on page 125.

Code	SET DATA	0002	0003	0004
EB	Changing the ventilation amount	High (Factory default)	Low	Imbalanced

* When [0004] is selected, adjust setting of the imbalanced ventilation Fan speed (Code: 48).

■ Setting for changing the operation output

Terminals 1 and 2 for external devices can be used to connect an auxiliary fan or to use the operation output for operating external devices connected to the terminal. It can be specified when the operation output is used.

* Apply this setting for the Air to Air Heat Exchanger to which an external device is connected.

- Select [ED] in step 3 on page 124.
- Select a value from the table on the below in step 4 on page 125.

Code	SET DATA	0000	0001	0002	0003	0004
ED	Changing the operation output	ON during normal operation (Factory default)	ON during normal operation, 24-hour ventilation, or nighttime heat purge operation	ON during 24-hour ventilation or nighttime heat purge operation	ON when SA fan is running	ON when EA fan is running

0000: Contact is on only during normal operation.
* Contact is off during 24-hour ventilation or nighttime heat purge operation.
* Contact is off during cold mode (while the temperature is below -10 °C).
0001: Contact is on during normal operation, 24-hour ventilation, or nighttime heat purge operation.
* Contact is on when 24-hour ventilation is stopped intermittently.
* Contact is off when nighttime heat purge operation is on standby. (paused before the monitoring operation of the nighttime heat purge operation starts)
* Contact is off during cold mode (while the temperature is below -10 °C).
0002: Contact is on during 24-hour ventilation or nighttime heat purge operation.
* Contact is on when 24-hour ventilation is stopped intermittently.
* Contact is off during normal operation or when the nighttime heat purge operation is on standby. (paused before the monitoring operation of the nighttime heat purge operation starts)
* Contact is off during cold mode (while the temperature is below -10 °C).
0003: Contact is on only when SA fan is running.
* Contact is off when 24-hour ventilation is stopped intermittently, so do not connect an auxiliary fan.
0004: Contact is on only when EA fan is running.
* Contact is off when 24-hour ventilation is stopped intermittently, so do not connect an auxiliary fan.

* Contact is off during delayed operation, when switching the damper (Heat exchange mode/Bypass mode), regardless of the selected value.

■ Abnormal signal/bypass mode signal output setting

Terminals 3 to 5 for external output can be used to detect an abnormal signal/bypass mode signal output. Output signal to be detected can be selected.

* Adjust this setting for the Air to Air Heat Exchanger to which an external output is connected.

* When [0000] is selected, contact is on If there is any error on the connected Air to Air Heat Exchanger.

- Select [EE] in step 3 on page 124.
- Select a value from the table on the below in step 4 on page 125.

Code	SET DATA	0000	0001
EE	Changing the abnormal signal/ bypass mode signal output	ON when an abnormal signal is detected (Factory default)	ON when the bypass mode signal is detected

0000: Contact is on when an abnormal signal output is detected.
0001: Contact is on when the bypass mode signal output is detected.
* Contact is on during nighttime heat purge operation.
* Contact is off when the nighttime heat purge operation is on standby. (paused before the monitoring operation of the nighttime heat purge operation starts)
* Even when is displayed on the remote controller, contact is off during the Heat exchange mode.

■ Remote controller switch monitoring function

This function is available to call the service monitor mode from the remote controller during a test run to acquire temperatures of sensors of indoor unit (Air to Air Heat Exchanger).

1 **Push CL and TEST buttons simultaneously for at least 4 seconds to call the service monitor mode.**

2 **Pushing TEMP. ▼ ▲ buttons, select the number of sensor (CODE No.) to be monitored. (See the following table.)**

3 **Pushing UNIT LOUVER (left side of the button), select an indoor unit to be monitored.**

* The unit number of the Air to Air Heat Exchanger is 31-OO.

4 **Push TEST button to return to the normal display.**

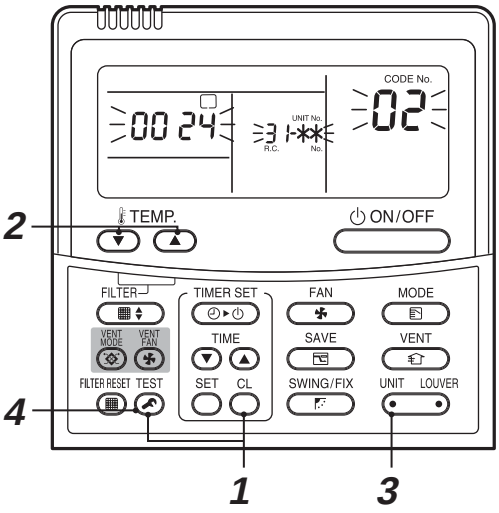

Indoor unit data (Air to Air Heat Exchanger)	
CODE No.	**Data name**
02	Indoor unit Return air temperature (TRA)
F0	Microcomputer cumulative energized hours (x 100h)
F2	Supply air fan cumulative energized hours (x 100h)
F3	Filter cumulative hours (x1 h)
FA	Indoor unit outdoor air temperature (TOA)

12 Test Run

■ Before performing a test run

- Before turning on the power supply, carry out the following procedure.
  Using 500 V-megger, check that resistance of 1 MΩ or more exists between the terminal block of the power supply and the earth (earthing).
  If resistance of less than 1 MΩ is detected, do not run the unit.
- When a test run is performed together with air conditioners, follow the Installation Manuals of the air conditioners.

■ Performing a test run of the Air to Air Heat Exchanger using the remote controller (NRC-01HE)

Confirm that the unit operates properly referring to the Owner's Manual of the Air to Air Heat Exchanger.

Operation item	Button	Display	Operation
1. Starting operation	ON / OFF		The operation lamp lights up, then the Air to Air Heat Exchanger starts running.
2. Changing the ventilation mode	VENT MODE		Each time the ventilation mode button is pressed, the mode changes as follows: → →
3. Changing the ventilation amount	VENT FAN		Each time the ventilation amount button is pressed, the ventilation amount changes as follows: → * or is displayed only when the imbalanced ventilation Fan speed is valid.
4. Stopping operation	ON / OFF		The operation lamp goes off, then the Air to Air Heat Exchanger stops running.

13 Maintenance

Running the Air to Air Heat Exchanger for a long period causes the filter or heat exchange element to become clogged with dust. If the filter or heat exchange element is clogged, the ventilation amount is reduced and ventilation effect will be deteriorated.
Clean the filter and heat exchange element regularly according to the extent of dust accumulation.

⚠ WARNING

Before performing maintenance, stop the unit, then turn off the breaker.
- Otherwise, an electric shock or injury may result.

Do not pour or spray water or detergent on the electric parts.
- Otherwise, an electrical leakage may occur and a fire or electric shock may result.

⚠ CAUTION

Wear protective gloves when performing maintenance.
- Otherwise, an injury may result.

■ Maintenance of the filter and heat exchange element

◆ Filter maintenance (Clean the filter once or twice a year.)

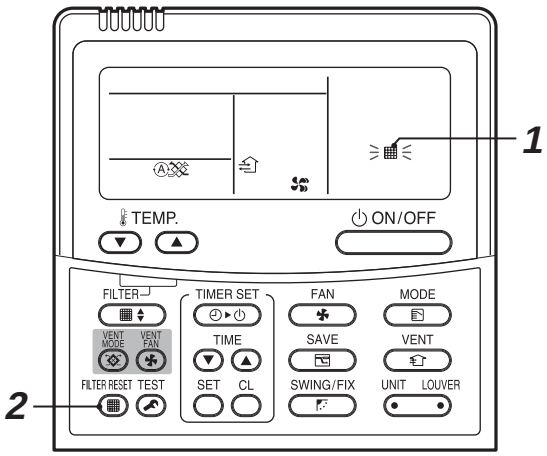

1 **Clean the filter if ▦ is indicated on the remote controller.**

2 **Press the (FILTER RESET ▦) button after cleaning the filter. The ▦ indicator disappears.**

1 **Open the inspection cover.**
Enter the ceiling cavity remove the screw of fixed part of Inspection cover and remove the fixing lever (support the inspection cover while removing the brackets), then open the inspection cover.

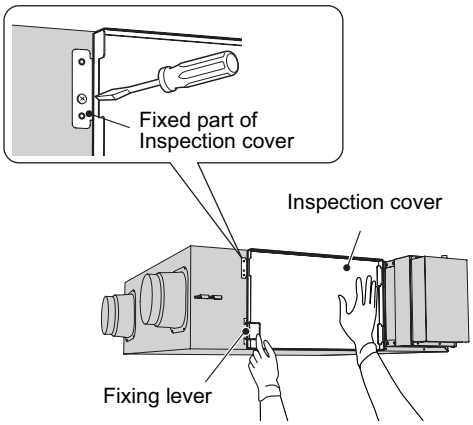

2 **Pull out the heat exchange elements.**
Filters are attached to the heat exchange element. Hold the handle of the heat exchange element, then pull it out.
* 2 heat exchange elements are equipped with this unit.

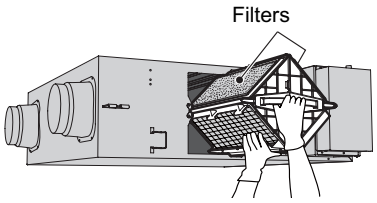

⚠ CAUTION

The table below shows the weight of each heat exchange element. Handle the heat exchange element carefully so as not to drop it.

Model name	Weight (kg/unit)	Quantity
VN-M150HE	1.7	2
VN-M250HE	1.7	2
VN-M350HE	1.7	2
VN-M500HE	2.9	2
VN-M650HE	2.9	2
VN-M800HE	3.7	2
VN-M1000HE	3.7	2

3 **Remove the filters.**

Remove the filters from the frame of the heat exchange element.

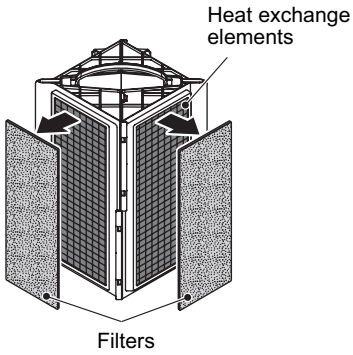

4 **Clean the filters.**

Clean the filters by dusting them or using a vacuum cleaner. If the filters are badly clogged, wash them by pressing them down in lukewarm water with a neutral dish washing liquid.

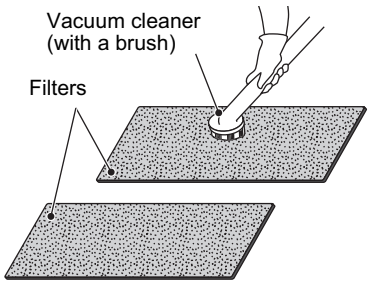

NOTE

- Do not dry the filter with heat from a flame; otherwise, deformation or deterioration of the filter may result.
- Light-up hours of the ▦ indicator is set to [2500 H]. If the filter is badly clogged, change the setting value. For the details, refer to the “Changing the time before the Filter Sign lights up” on page 127.
- Do not soak the filter in water hotter than 60°C; otherwise, deformation or deterioration of the filter may result.

■ Maintenance of the heat exchange elements (Clean the heat exchange elements once or twice in 2 years.)

1 **Clean the heat exchange elements**

Remove the dust on the surface of the heat exchange element using a vacuum cleaner.

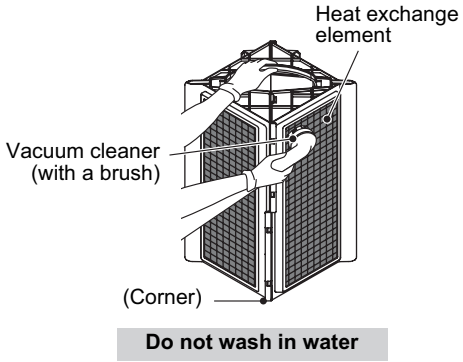

NOTE

- Use a vacuum cleaner with a brush, and stroke the brush gently on the heat exchange element.
- Do not press the nozzle of the vacuum cleaner hard against the heat exchange element; otherwise, the surface of it will be scratched.
- Do not wash the heat exchange element in water.

* Contact the dealer or installer when the heat exchange element is damaged and replacing it is necessary.

■ Reinstallation after maintenance

1 **Attach the filters.**

Attach the filters after they have completely dried. Attach them to the frame of the heat exchange element as before.

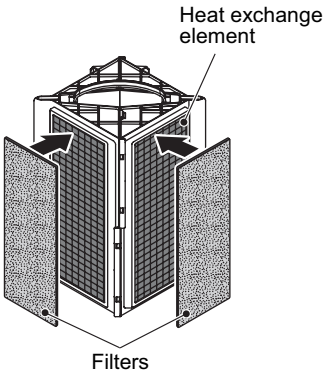

2 Attach the heat exchange elements.

Install the heat exchange elements as before.

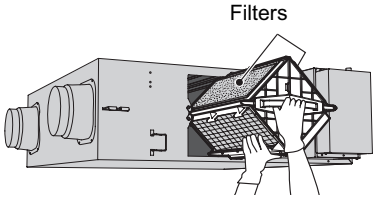

NOTE

Attach the filters. If this unit is used without them, the heat exchange elements will become clogged and a breakdown may result.

3 Attach the inspection cover.

Fit the fixing lever to the inspection cover to attach it securely and fix the fixed part of Inspection cover with a screw.

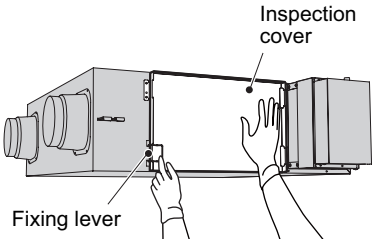

14 Troubleshooting

■ Confirmation and check

When an error occurred in the Air to Air Heat Exchanger, the check code and the unit No. of Air to Air Heat Exchanger appear on the display part of the remote controller.
The check code is only displayed during the operation. If the display disappears, operate the Air to Air Heat Exchanger according to the following “Confirmation of error history” for confirmation.
* Unit No. of Air to Air Heat Exchanger is 31-OO.

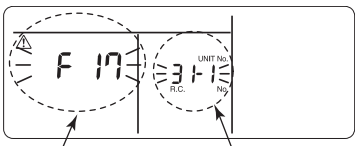

Check code

Unit No. of the Air to Air Heat Exchanger with a problem

■ Confirmation of error history

When an error occurred on the Air to Air Heat Exchanger, the error history can be confirmed with the following procedure. (The error history is stored in memory up to 4 troubles.)
The error can be confirmed from both operating status and stop status.

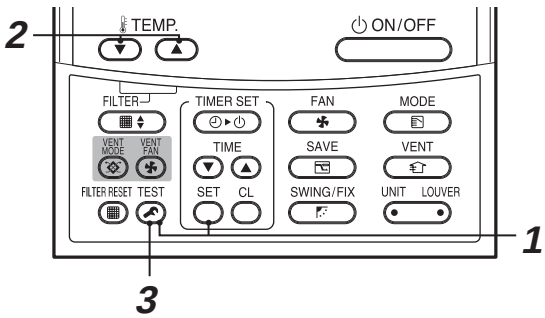

1 When pushing SET and TEST buttons at the same time for 4 seconds or more, the following display appears.
If [Service check] is displayed, the mode enters in the trouble history mode.
- [**01**: Order of error history] is displayed in CODE No. window.
- [Check code] is displayed in CHECK window.
- [Air to Air Heat Exchanger address in which an error occurred] is displayed in Unit No.

* Unit No. of Air to Air Heat Exchanger is 31-OO.

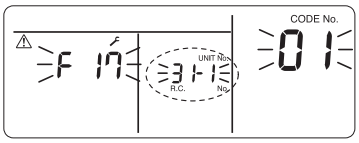

2 Every pushing of TEMP. button used to set temperature, the error history stored in memory is displayed in order.
The numbers in CODE No. indicate CODE No. [**01**] (latest) → [**04**] (oldest).

REQUIREMENT

Do not push CL button because all the error history of the Air to Air Heat Exchanger will be deleted.

3 After confirmation, push TEST button to return to the usual display.

■ Check codes and parts to be checked

Wired remote controller display	Main defective parts	Judging device	Parts to be checked / error description
E01	No header remote controller	Remote controller	Incorrect remote controller setting --- The header remote controller has not been set (including two remote controllers).
	Remote controller communication error		No signal can be received from the indoor unit.
E02	Remote controller transmission error	Remote controller	System interconnecting wires, indoor P.C. board, remote controller --- No signal can be sent to the indoor unit.
E03	Indoor unit-remote controller regular communication error	Indoor	Remote controller, network adapter, indoor P.C. board --- No data is received from the remote controller or network adapter.
E08	Duplicated indoor addresses	Indoor	Indoor address setting error --- The same address as the self-address was detected.
E09	Duplicated header remote controllers	Remote controller	Remote controller address setting error --- Two remote controllers are set as header in the double-remote controller control.
			(* The header indoor unit stops raising alarm and follower indoor units continue to operate.)
E18	Header indoor unit-indoor follower unit regular communication error	Indoor	Indoor P.C. board --- Regular communication is not possible between header and follower indoor units or between twin header (main) and follower (sub) units.
F17	Air to Air Heat Exchanger (TOA) error	Air to Air Heat Exchanger	Outdoor Air sensor (TOA), indoor P.C. board --- Open-circuit or short-circuit of the heat exchanger sensor (TOA) was detected.
F18	Air to Air Heat Exchanger (TRA) error	Air to Air Heat Exchanger	Return Air sensor (TRA), indoor P.C. board --- Open-circuit or short-circuit of the heat exchanger sensor (TRA) was detected.
F29	Indoor unit, other P.C. board error	Indoor	Indoor P.C. board --- EEPROM error
L03	Duplicated header indoor units	Indoor	Indoor address setting error --- There are two or more header units in the group.
L08	Indoor group address not set	Indoor	Indoor address setting error --- Indoor address group has not been set.
L09	Indoor power level not set	Indoor	Indoor power level has not been set.
L20	LAN communication error	Indoor	Address setting, central control remote controller, network adapter --- Duplication of address in central control communication
P31	Other indoor unit error	Indoor	Another indoor unit in the group is raising an alarm.
			E03/L07/L03/L08 alarm check locations and error description

* “Indoor” in “Judging device” refers to the Air to Air Heat Exchanger or the air conditioner.

13 How to replace the PC board for service on the Air to Air Heat Exchanger

<Model>
VN-MHE series**

411-75-190
(MCC-1615)

■ Note for replacing the PC board for service on the Air to Air Heat Exchanger

Before replacing the PC board on the Air to Air Heat Exchanger, non-volatile memory (hereinafter referred to as EEPROM (IC503)) on it stores the important data such as the model code, the capacity code (factory default), the group address, and the 24-hour ventilation settings set automatically or manually (when installing the unit). Follow the procedure below to replace the PC board for service on the Air to Air Heat Exchanger. After replacing the board, confirm the settings of the Air to Air Heat Exchanger unit No. and the header/follower configuration in the group. In addition, perform a test run.

Replacement procedure

▼ Case 1
When you can turn on the Air to Air Heat Exchanger and can read the setting data from the wired remote controller before you replace the board
Readout of EEPROM data. ***1 (See page 140.)**

⇩

Replace the PC board for service and turn the power on. ***2 (See page 140.)**

⇩

Writing-in of the readout EEPROM data. ***3 (See page 141.)**

⇩

Reset the power supply (for all Air to Air Heat Exchangers (including the indoor units) connected to the remote controller while performing group operation).

▼ Case 2
When you can neither turn on the Air to Air Heat Exchanger nor operate the wired remote controller due to a problem with the feeder circuit (when there is a problem with the circuit board) before you replace the board
Replace the EEPROM (IC503). (For details, see “EEPROM arrangement figure” on page 141.)
Readout of EEPROM on the PC board, then attach the EEPROM for service.

⇩

Replace the PC board for service and turn the power on. ***2 (See page 140.)**

⇩

Readout of EEPROM data. ***1 (See page 140.)**
If the data cannot be read, go to **Case 3**.

⇩

Replace the EEPROM (IC503). (For details, see “EEPROM arrangement figure” on page 141.)
Reattach the EEPROM for service. (Attach the EEPROM as before on the PC board for service.)

⇩

Replace the PC board for service and turn the power on. ***2 (See page 140.)**

⇩

Writing-in of the readout EEPROM data. ***3 (See page 141.)**

⇩

Reset the power supply (for all Air to Air Heat Exchangers (including the indoor units) connected to the remote controller while performing group operation).

▼ Case 3
When you cannot read the setting data due to a problem with the EEPROM before you replace the board
Replace the PC board for service and turn the power on. ***2 (See page 140.)**

⇩

Writing-in of the setup the setting data such as the model code, capacity code, 24-hour ventilation settings etc. on the EEPROM according to client information. ***3 (See page 141.)**

⇩

Reset the power supply (for all Air to Air Heat Exchangers (including the indoor units) connected to the remote controller while performing group operation).

*1 Readout of the setup data from the EEPROM

(Read both the setting data adjusted locally and the factory default setting data.)

1 Press and hold the SET + CL + TEST buttons for 4 seconds at the same time. ❶ (corresponds with the numbers on "Remote controller NRC-01HE" on page 141)

- While performing group operation control with the air conditioners, the unit No. displayed first represents the header indoor unit.
  The code (DN) 10 is displayed. In addition, the fans of the selected indoor unit and Air to Air Heat Exchanger start running and the flap of the indoor unit starts swinging.

2 Each time you press UNIT LOUVER (left side of the button), the unit No. of the indoor units or the Air to Air Heat Exchangers in the group are displayed successively. ❷

Specify the Air to Air Heat Exchanger UNIT No. (31-OO) to replace.

- The fan of the selected Air to Air Heat Exchanger starts running.
- The indicator lights up when using NRC-01HE.
- The Line (system) address is fixed as 31.
- The Indoor unit address is between 1 and 64. The address is specified with No.1 to No.4 of SW702 and No.1 and No.2 of SW703.

3 Use the TEMP. buttons ▲/▼ to cycle through the codes (DN) one by one. ❸

4 Change the code (DN) from 10 to 01. (Setting for lighting-up hours of the Filter Sign)

Take notes of the description of the setting data displayed on the remote controller.

5 Use the TEMP. buttons ▲/▼ to change the code (DN).

Take notes as in step *4*.

6 Repeat step *5* and take notes of the setup data. (See "Example" on page 142.)

- The code (DN) is between 01 and FF. Some DN numbers are skipped.

7 When you have finished taking notes, press the TEST button to return to normal operation. (The unit stops.) ❻

(It takes about 1 minute to resume operation on the remote controller.)

Minimum necessary codes

DN	Item
10	Model code
11	Capacity code
14	Group address

- (DN) 14: When the setting data of the group address is set to [0000] or [0001], set the changeover switch for the header/follower unit (No.4 of SW703) to [Header: ON].

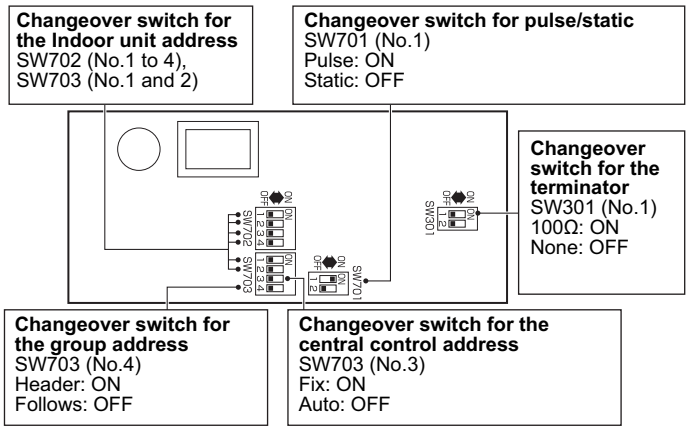

*2 Replacing the PC board for service

1 Replace the PC board with the one for service.

Apply the settings of the changeover switches (SW701, SW702, SW703, and SW301) as before to the PC board for service.

- When replacing the PC board of the header unit for an Air to Air Heat Exchanger system, set the changeover switch for the group address (No.4 of SW703) to [Header: ON].

2 Turn on the Air to Air Heat Exchanger of which you replaced the PC board, then proceed to *3.

- While performing group operation control with the air conditioners, turn on all of the indoor units and Air to Air Heat Exchangers in the group.

▼ About the switches on the circuit board of the Air to Air Heat Exchanger

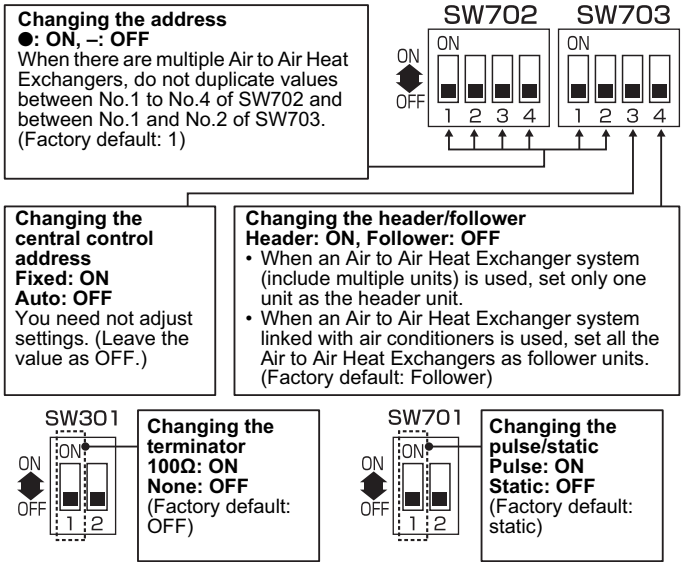

Address switch (●: ON, –: OFF)

Address	Address switch number						Address	Address switch number					
	SW702				SW703			SW702				SW703	
	1	2	3	4	1	2		1	2	3	4	1	2
1	–	–	–	–	–	–	33	–	–	–	–	–	●
2	●	–	–	–	–	–	34	●	–	–	–	–	●
3	–	●	–	–	–	–	35	–	●	–	–	–	●
4	●	●	–	–	–	–	36	●	●	–	–	–	●
5	–	–	●	–	–	–	37	–	–	●	–	–	●
6	●	–	●	–	–	–	38	●	–	●	–	–	●
7	–	●	●	–	–	–	39	–	●	●	–	–	●
8	●	●	●	–	–	–	40	●	●	●	–	–	●
9	–	–	–	●	–	–	41	–	–	–	●	–	●
10	●	–	–	●	–	–	42	●	–	–	●	–	●
11	–	●	–	●	–	–	43	–	●	–	●	–	●
12	●	●	–	●	–	–	44	●	●	–	●	–	●
13	–	–	●	●	–	–	45	–	–	●	●	–	●
14	●	–	●	●	–	–	46	●	–	●	●	–	●
15	–	●	●	●	–	–	47	–	●	●	●	–	●
16	●	●	●	●	–	–	48	●	●	●	●	–	●
17	–	–	–	–	●	–	49	–	–	–	–	●	●
18	●	–	–	–	●	–	50	●	–	–	–	●	●
19	–	●	–	–	●	–	51	–	●	–	–	●	●
20	●	●	–	–	●	–	52	●	●	–	–	●	●
21	–	–	●	–	●	–	53	–	–	●	–	●	●
22	●	–	●	–	●	–	54	●	–	●	–	●	●
23	–	●	●	–	●	–	55	–	●	●	–	●	●
24	●	●	●	–	●	–	56	●	●	●	–	●	●
25	–	–	–	●	●	–	57	–	–	–	●	●	●
26	●	–	–	●	●	–	58	●	–	–	●	●	●
27	–	●	–	●	●	–	59	–	●	–	●	●	●
28	●	●	–	●	●	–	60	●	●	–	●	●	●
29	–	–	●	●	●	–	61	–	–	●	●	●	●
30	●	–	●	●	●	–	62	●	–	●	●	●	●
31	–	●	●	●	●	–	63	–	●	●	●	●	●
32	●	●	●	●	●	–	64	●	●	●	●	●	●

*3 Writing-in of the setup data on the EEPROM

(Setting data on the EEPROM of the PC board for service is as factory default.)

1 **Press and hold the SET + CL + TEST buttons for 4 seconds at the same time. ❶ (corresponds with the "Remote controller NRC-01HE" on page 141)**

- While performing group operation control with the air conditioners, the unit No. displayed first represents the header Indoor unit.
  The code (DN) 10 is displayed. In addition, the fans of the selected indoor unit and Air to Air Heat Exchanger start running and the flap of the indoor unit starts swinging.

2 **Each time you press UNIT LOUVER (left side of the button), the unit No. of the indoor units or the Air to Air Heat Exchangers in the group are displayed successively. ❷**
Specify the Air to Air Heat Exchanger UNIT No. (31-OO) to replace.

- The fan of the selected Air to Air Heat Exchanger starts running.
- The indicator lights up when using NRC-01HE.
- The Line (system) address is fixed as 31.
- The Indoor unit address is between 1 and 64. The address is specified with No.1 to No.4 of SW702 and with No.1 and No.2 of SW703.

3 **Use the TEMP. buttons ▲/▼ to cycle through the codes (DN) one by one. ❸**

4 **Select the model and capacity of the Air to Air Heat Exchanger.**
(Factory default settings are written on the EEPROM by selecting the model and capacity.)

1) Confirm that the code (DN) is set to 10.
2) Use the TIME button to select the model. ❹
   (Select 0050 for the Air to Air Heat Exchanger. See the table on page 142.)
3) Press the SET button. (Confirm that the indicator lights up.) ❺
4) Use the TEMP. buttons ▲/▼ to set the code (DN) to 11.
5) Use the TIME button to select the capacity.
   (Ex. Select 0001 for 150m^3/h type. See the table on page 142.)
6) Press the SET button. (Confirm that the indicator lights up.)
7) Press the TEST button to return to normal operation. (The unit stops.) ❻
   (It takes about 1 minute to resume operation on the remote controller.)

5 **Writing-in of the setup data specified locally on the EEPROM.**
Repeat step *1*.

6 **Use the TEMP. buttons ▲/▼ to set the code (DN) to 01.**
(Setting for lighting-up hours of the Filter Sign)

7 **Compare the setup data with the notes (page 142) and client information.**

1) If the data is different from that of the notes and client information, use the TIME button to enter the data on the notes, then press the SET button. (Confirm that the indicator lights up.)
2) If the data is the same, go to the next step.

8 **Use the TEMP. buttons ▲/▼ to change the code (DN).**
Compare the setup data as in step *7*. Change the setup data according to the notes recorded before replacing the PC board.

- (DN) 14: As the group address setting is specified by No.4 of SW703, you need not change the setting.

9 **Repeat steps *7* and *8*.**

10 **When the setup are complete, press the TEST button to return to normal operation. (The unit stops.) ❻**
(It takes about 1 minute to resume operation on the remote controller.)

- The code (DN) is between 01 and FF. Some DN numbers are skipped. Even if you change the setting data by mistake and press the SET button, you can recover the setting data by pressing the CL button (only before changing the code (DN)).

Remote controller NRC-01HE

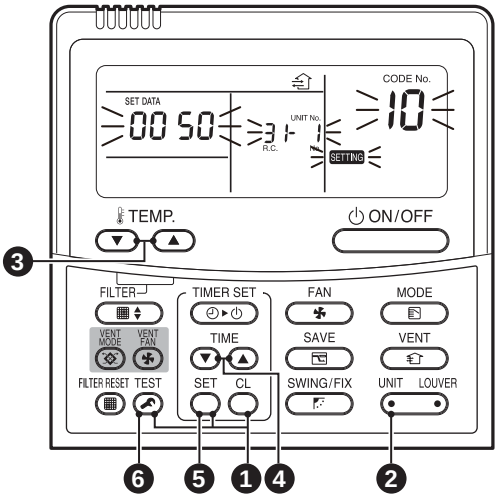

EEPROM arrangement figure

The EEPROM (IC503) is attached to the IC socket. Use tweezers to remove the EEPROM. When you attach it to the IC socket, align the direction as in the figure on the right.

- When you replace the EEPROM, be careful not to bend any IC wires.

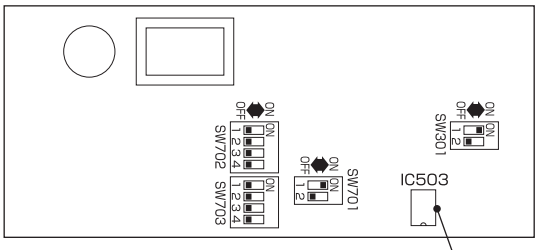

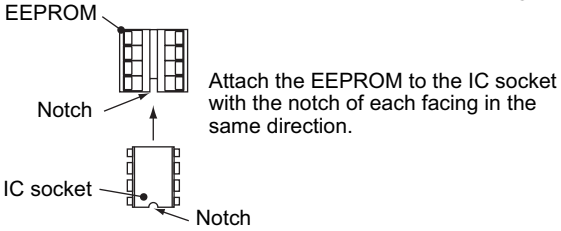

■ Notes for the setting items (Code list: Example)

DN	Item	Memo	Factory default
01	Lighting-up hours of the Filter Sign		0002: 2500H
02	Extent of filter clogging		0000: Normal
03	Central control address		0099: Unfixed
10	Model code		0050: Air to Air Heat Exchanger (Ceiling-embedded duct)
11	Capacity code		Depending on the capacity
14	Group address		0099: Unfixed
28	Auto recovery from a power failure		0000: None
47	Ventilation fan speed during 24-hour ventilation/nighttime heat purge operation		0000: Low fixed
48	Unbalanced fan speed ventilation		0000: Normal
49	24-hour ventilation		0000: Invalid
4A	On/off ratio during 24-hour ventilation		0000: Normal
4B	Delayed operation		0000: Invalid
4C	Nighttime heat purge		0000: Invalid
4D	Setting of the exhausting fan operation below −15°C (0A)		0000: Exhausting fan run
4E	Setting of the linked operation with external devices		0000: ON/OFF linked
5C	Damper output		0000: Normal
9D	ON/OFF operation linked with the power status (on/off)		0000: Invalid
EA	Changing the ventilation mode		0003: Automatic mode
EB	Changing the ventilation fan speed		0002: High
EC	Automatic mode control during linked operation with the air handling unit		0000: Valid while the air handling unit is in operation
ED	Changing the operation output		0000: ON during normal operation
EE	Changing the abnormal signal/Bypess mode signal output		0000: ON when an abnormal signal is detected

* Adjust the setting of EA/EB when using the RBC-AMT 32E, RBC-AMS41E remote controller or using the system without the remote controller. (Not necessary when using the NRC-01HE remote controller)

Model
Code: 10

Setting data	Model	Model name (abbreviation)
0050*	Air to Air Heat Exchanger (Ceiling-embedded)	VN-M***HE series

* Factory default value of EEPROM installed on the service circuit board

Capacity of the Air to Air Heat Exchanger
Code: 11

Setting data	Type
0000*	Invalid
0001	150m^3/h type
0002	250m^3/h type
0003	350m^3/h type
0004	500m^3/h type
0005	650m^3/h type
0006	800m^3/h type
0007	1000m^3/h type

* Factory default value of EEPROM installed on the service circuit boar

14 Exploded Diagram/Parts List

VN-M150HE, VN-M250HE, VN-M350HE, VN-M500HE, VN-M650HE

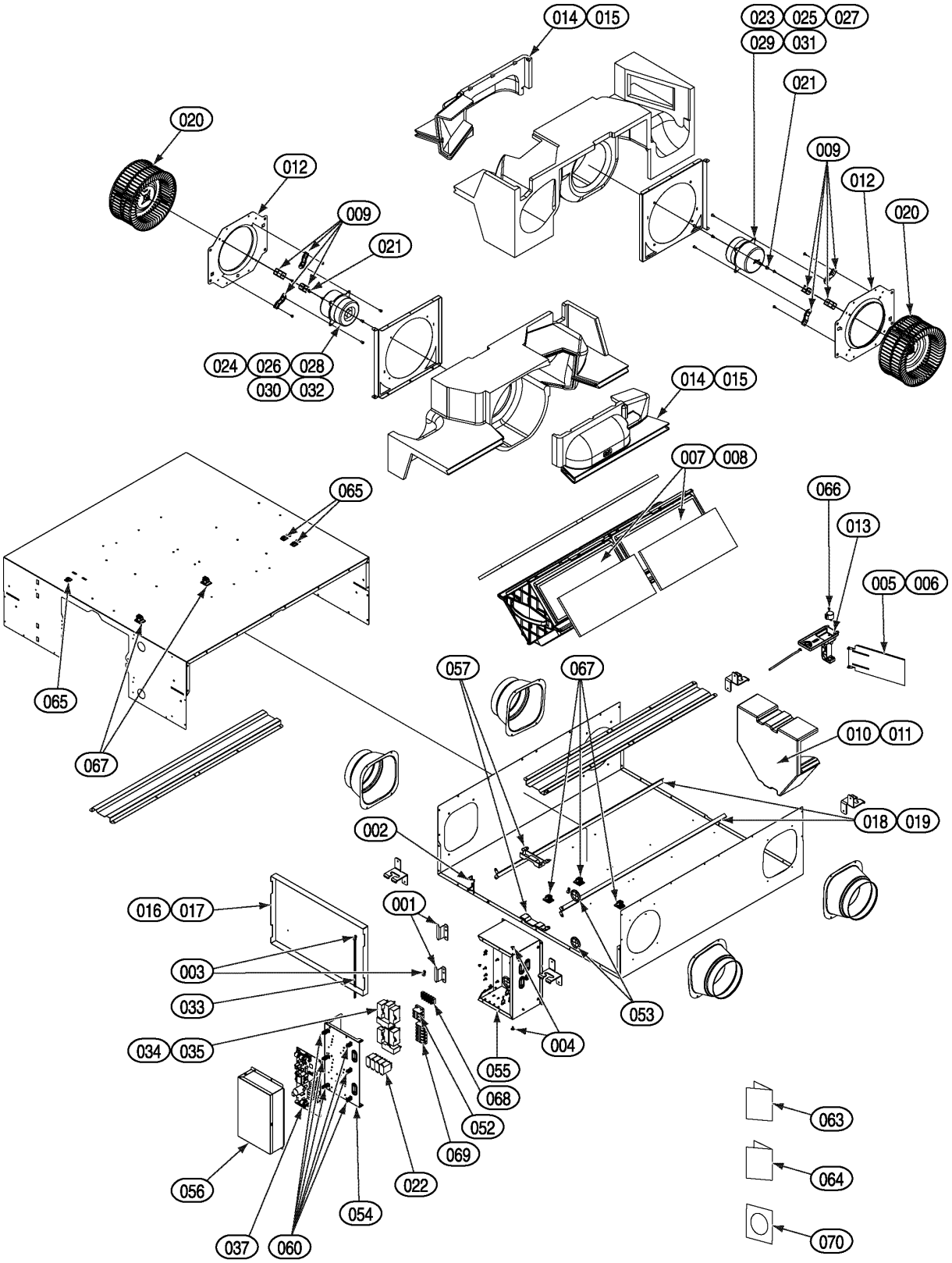

Ref. No.	Part No.	Description	Q'ty/Set				
			VN-M150HE	VN-M250HE	VN-M350HE	VN-M500HE	VN-M650HE
001	41112642	HOLDER, LID	2	2	2	2	2
002	41112643	LEVER, LID	1	1	1	1	1
003	41112644	COUPLING	2	2	2	2	2
004	41118427	SCREW, TAPPING	2	2	2	2	2
005	41118646	DAMPER	1	1	1		
006	41118647	DAMPER				1	1
007	41119474	HEAT EXCHANGER	2	2	2		
008	41119475	HEAT EXCHANGER				2	2
009	4111A534	HOLDER, MOTOR	8	8	8	8	8
010	4111A569	CASE ASSY, EXHAUST	1	1	1		
011	4111A570	CASE ASSY, EXHAUST				1	1
012	4111A572	BELL MOUTH	2	2	2	2	2
013	4111A573	STAY, DAMPER MOTOR	1	1	1	1	1
014	4111A574	COVER, FOAM	2	2	2		
015	4111A575	COVER, FOAM				2	2
016	4111A583	LID, SERVICE	1	1	1		
017	4111A584	LID, SERVICE				1	1
018	4111A580	RAIL	2	2	2		
019	4111A581	RAIL				2	2
020	41120592	FAN	2	2	2	2	2
021	41129230	NUT	1	1	1	1	1
022	43154156	RELAY, LY-1F	4	4	4	4	4
023	4115A227	MOTOR, SUPPLY	1				
024	4115A228	MOTOR, EXHAUST	1				
025	4115A229	MOTOR, SUPPLY		1			
026	4115A230	MOTOR, EXHAUST		1			
027	4115A231	MOTOR, SUPPLY			1		
028	4115A232	MOTOR, EXHAUST			1		
029	4115A233	MOTOR, SUPPLY				1	
030	4115A234	MOTOR, EXHAUST				1	
031	4115A235	MOTOR, SUPPLY					1
032	4115A236	MOTOR, EXHAUST					1
033	41169332	CHAIN	1	1	1	1	1
034	41171307	CAPACITOR	2	2			
035	41171308	CAPACITOR			2	2	2
037	41175190	PC BOARD, MCC-1615	1	1	1	1	1
038	41177877	CONNECTOR, 1	1	1	1	1	1
040	41177881	CONNECTOR, 2	1	1	1	1	1
041	41177882	CONNECTOR, 3	2	2	2	2	2
042	41177883	CONNECTOR, 4	1	1	1	1	1
043	41177884	CONNECTOR, 4	1	1	1	1	1
044	41177885	CONNECTOR, 5	1	1	1	1	1
045	41177886	CONNECTOR, 6	1	1	1	1	1
046	41177887	CONNECTOR, 7	1	1	1	1	1
047	41177888	CONNECTOR, 8	1	1	1	1	1
049	41177890	CONNECTOR, 9				1	1
050	41177891	CONNECTOR, 9	1	1	1		
052	41177893	TERMINAL BLOCK, 2P	1	1	1	1	1

Ref. No.	Part No.	Description	Q'ty/Set				
			VN-M150HE	VN-M250HE	VN-M350HE	VN-M500HE	VN-M650HE
053	41179575	BUSHING	4	4	4	4	4
054	41179576	LID, ELECTRIC PARTS	1	1	1	1	1
055	41179577	BOX, ELECTRIC PARTS	1	1	1	1	1
056	41179585	COVER, PC BOARD	1	1	1	1	1
057	41179579	COVER, WIRE	2	2	2	2	2
058	41179586	SENSOR, TOA				1	1
059	41179587	SENSOR, TRA	1	1	1		
060	41179582	SPACER	6	6	6	6	6
061	41179589	SENSOR, TRA				1	1
062	41179588	SENSOR, TOA	1	1	1		
063	4118S736	MANUAL, OWNER'S	1	1	1	1	1
064	4118S737	MANUAL, INSTALLATION	1	1	1	1	1
065	43019889	CLAMP	3	3	3	3	3
066	4302C063	MOTOR, LOUVER	1	1	1	1	1
067	43089149	CLAMP	5	5	5	5	5
068	43160561	TERMINAL, 4P	1	1	1	1	1
069	43160569	TERMINAL BLOCK, 5P	1	1	1	1	1
070	4118S738	DISK	1	1	1	1	1

VN-M800HE, VN-M1000HE

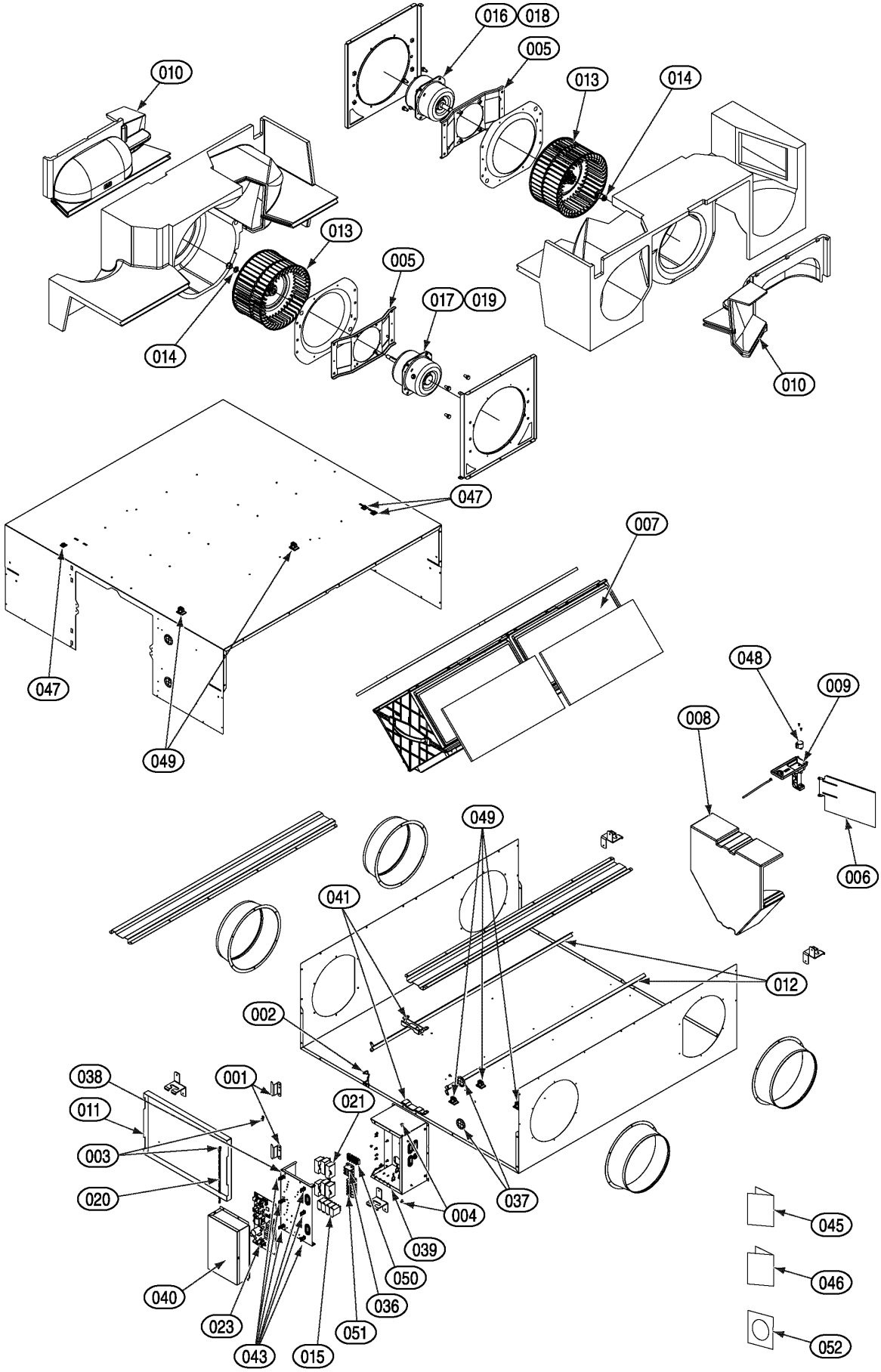

Ref. No.	Part No.	Description	Q'ty/Set	
			VN-M800HE	VN-M1000HE
001	41112642	HOLDER, LID	2	2
002	41112643	LEVER, LID	1	1
003	41112644	COUPLING	2	2
004	41118427	SCREW, TAPPING	2	2
005	41118615	HOLDER, MOTOR	2	2
006	41118648	DAMPER	1	1
007	41119476	HEAT EXCHANGER	2	2
008	4111A571	CASE ASSY, EXHAUST	1	1
009	4111A573	STAY, DAMPER MOTOR	1	1
010	4111A576	COVER, FOAM	2	2
011	4111A585	LID, SERVICE	1	1
012	4111A582	RAIL	2	2
013	41120537	FAN	2	2
014	41129222	WASHER	1	1
015	43154156	RELAY, LY-1F	4	4
016	4115A237	MOTOR, SUPPLY	1	
017	4115A238	MOTOR, EXHAUST	1	
018	4115A239	MOTOR, SUPPLY		1
019	4115A240	MOTOR, EXHAUST		1
020	41169332	CHAIN	1	1
021	41171309	CAPACITOR	2	4
023	41175190	PC BOARD, MCC-1615	1	1
024	41177877	CONNECTOR, 1	1	
025	41177894	CONNECTOR, 1		1
026	41177881	CONNECTOR, 2	1	1
027	41177882	CONNECTOR, 3	2	2
028	41177883	CONNECTOR, 4	1	1
029	41177884	CONNECTOR, 4	1	1
030	41177885	CONNECTOR, 5	1	1
031	41177886	CONNECTOR, 6	1	1
032	41177887	CONNECTOR, 7	1	1
033	41177888	CONNECTOR, 8	1	1
035	41177890	CONNECTOR, 9	1	1
036	41177893	TERMINAL BLOCK, 2P	1	1
037	41179575	BUSHING	4	4
038	41179576	LID, ELECTRIC PARTS	1	1
039	41179577	BOX, ELECTRIC PARTS	1	1
040	41179585	COVER, PC BOARD	1	1
041	41179579	COVER, WIRE	2	2
042	41179586	SENSOR, TOA	1	1
043	41179582	SPACER	6	6
044	41179589	SENSOR, TRA	1	1
045	4118S736	MANUAL, OWNER'S	1	1
046	4118S737	MANUAL, INSTALLATION	1	1
047	43019889	CLAMP	3	3
048	4302C063	MOTOR, LOUVER	1	1
049	43089149	CLAMP	5	5
050	43160561	TERMINAL, 4P	1	1

Ref. No.	Part No.	Description	Q'ty/Set	
			VN-M800HE	VN-M1000HE
051	43160569	TERMINAL BLOCK, 5P	1	1
052	4118S738	DISK	1	1

TOSHIBA CARRIER CORPORATION
23-17, TAKANAWAN,3 CHOME,MINATOKU TOKYO, 108-0075, JAPAN

2nd publication in Mar.2012 ; File No.A10-021-1,REVISED EDITION 1
1st publication in Jun.2005 ; File No. A10-021

Specifications subject to change without notice.